The EUDAQ Data Acquisition for the JRA1 Pixel Telescope

Daniel Haas
DPNC Genève (CH)

LCTW'09 Orsay

- Overview
- Hardware Ingredients
- Software Framework
- Pros & Cons
- EUDAQ for AIDA?
- Conclusions

Telescope Ingredients

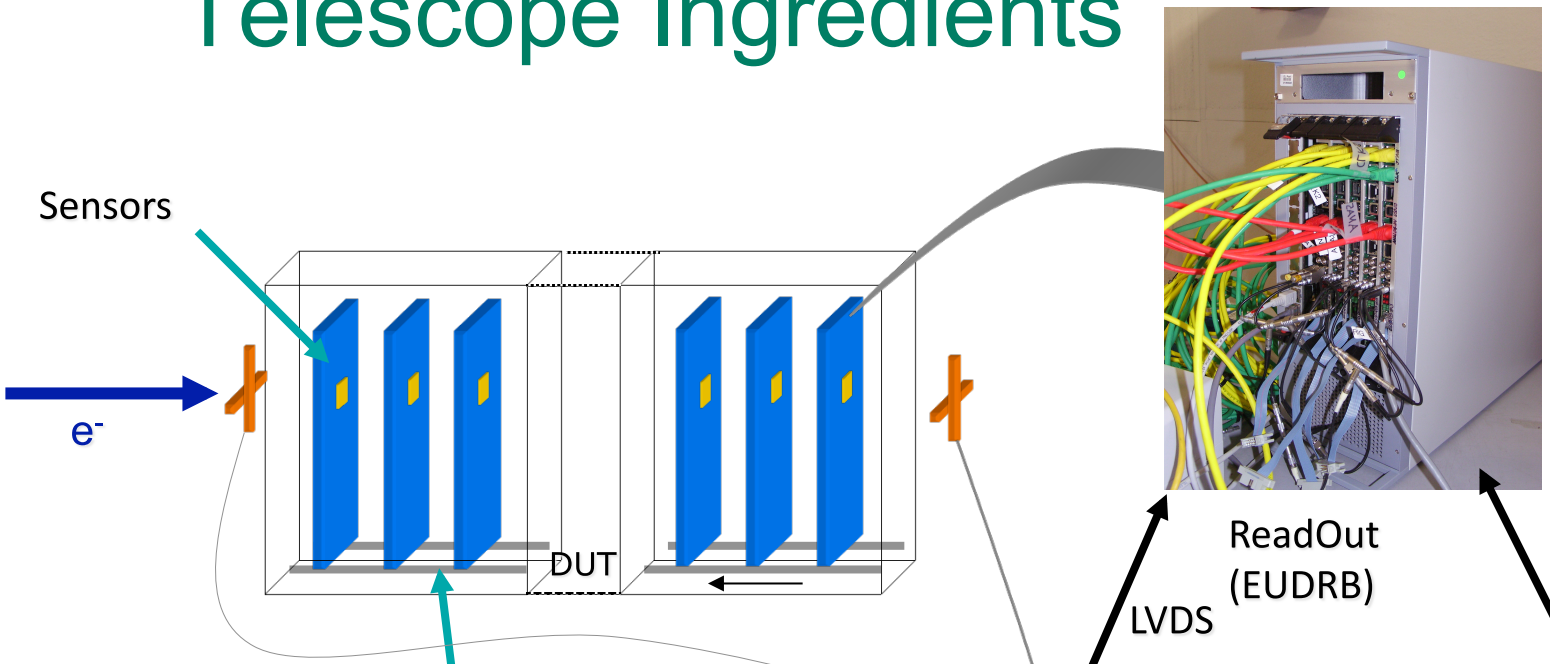

ReadOut
(EUDRB)

LVDS

GBIT ETH

DESY Hamburg

- ✓ Sensors
- ✓ Readout Boards
- ✓ EUDAQ
- ✓ Trigger Logic Unit
- ✓ Mechanics

Trigger Logic Unit (TLU)

USB

EUDAQ

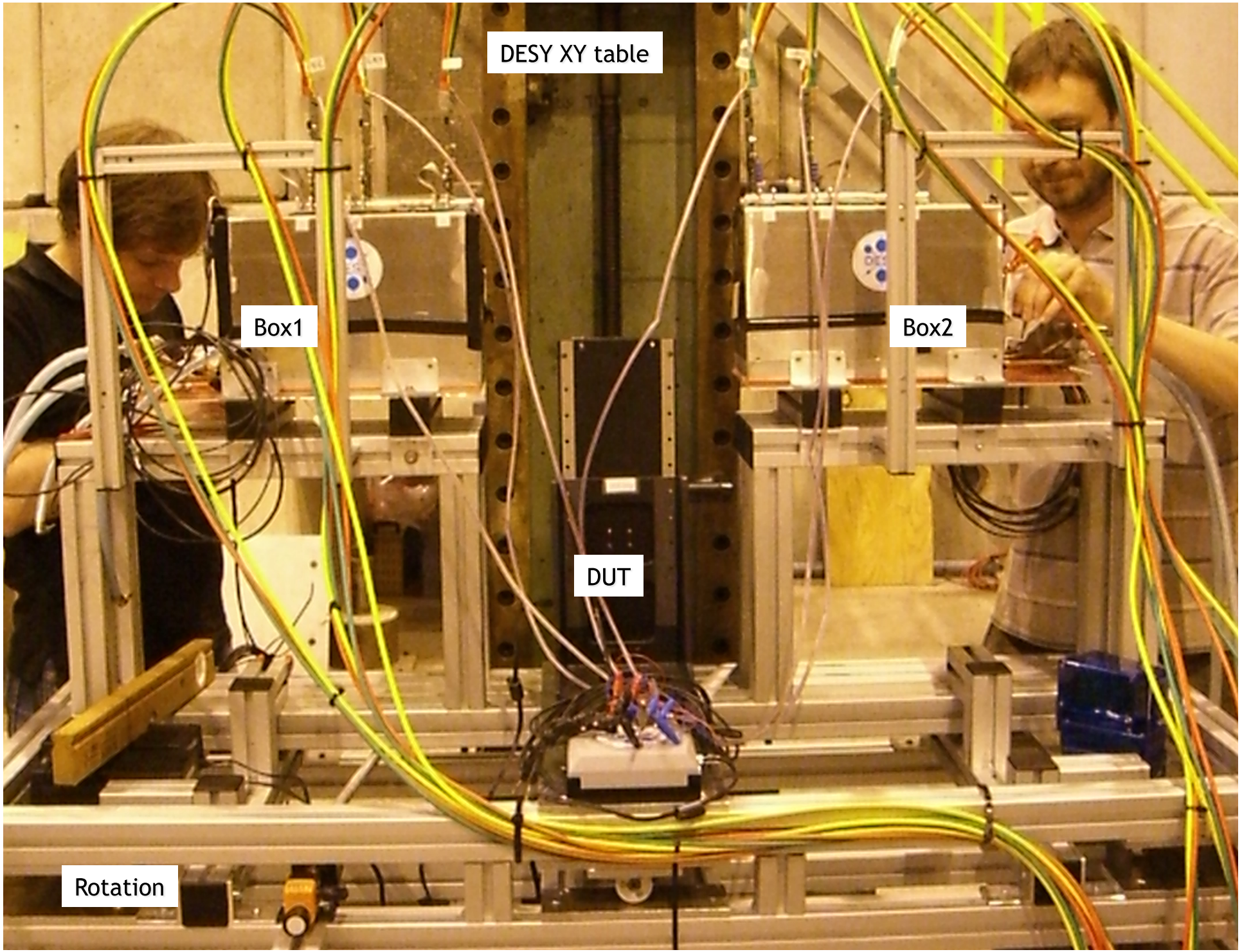
DESY XY table
Box1
Box2
DUT
Rotation

Ingredients for the final telescope

Hardware

- 2 VME-Crates with 3 EUDRBs/1 CPU each
- TLU
- 6 Mimosa 26 (1x2 cm)

Software

- EUDAQ (Acquisition framework)
- EUTelescope (Analysis framework)

DAQ: Hardware

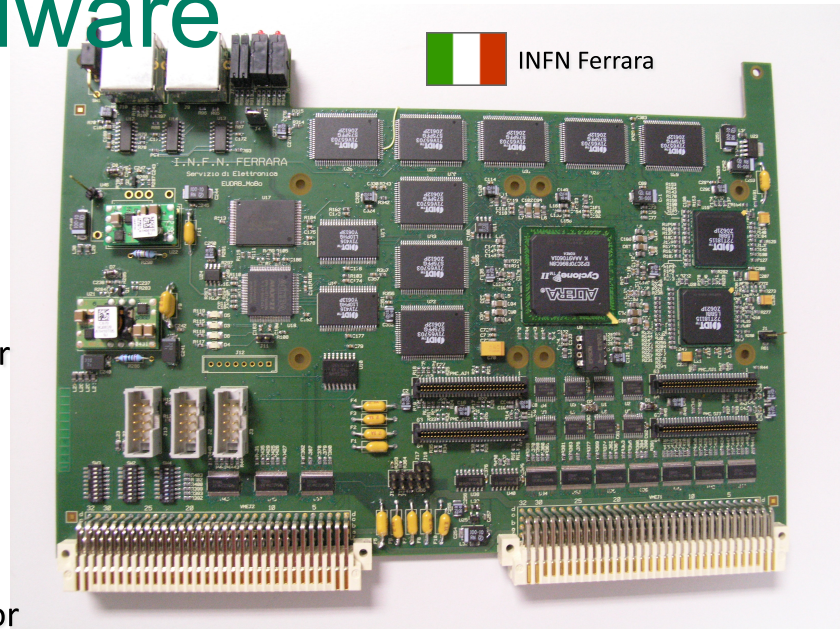

EUDET Data Reduction Board:

- Mother board with ALTERA CycloneII FPGA (clock: 80MHz) hosts core resources and Interfaces (VME64X slave, USB2.0, EUDET trigger bus)
- Analog Daughter card up to 20 MHz (4 channels)
- Digital daughter card drives/receives control signals for the detectors and features a USB 2.0 link
- NIOS II, 32 bit "soft" microcontr. (40Mz) for diagnostitics, pedestal+noise calculation and remote configuration
- Two readout modes: Zero Suppressed for normal data taking, raw readout of multiple frames for debugging or off-line pedestal and noise calculations

Trigger Logic Unit

- Two handshake modes
  - Simple handshake (Trigger/Busy/Reset)
  - Trigger data handshake incl. event number
- Timestamp and event-number via USB
- LVDS via RJ45, NIM and TTL via Lemo
- Inputs for four trigger signals (ANDed, ORed, VETOed)
- Internal trigger mode and scalers for testing
- Low voltage power supply for PMTs

DAQ: Software

- Platform independent (MacOSX, Linux, Windows)
- Object oriented, distributed and multi-threaded
- Highly modular, but light-weight
- DAQ Software is divided into many parallel tasks:
  - RunControl to steer the task
  - several Producer tasks read the hardware
  - one DataCollector task bundles events, writes to file and sends subsets for monitoring
  - Several Online - Monitoring tasks
  - Logger task allows to see what is going on

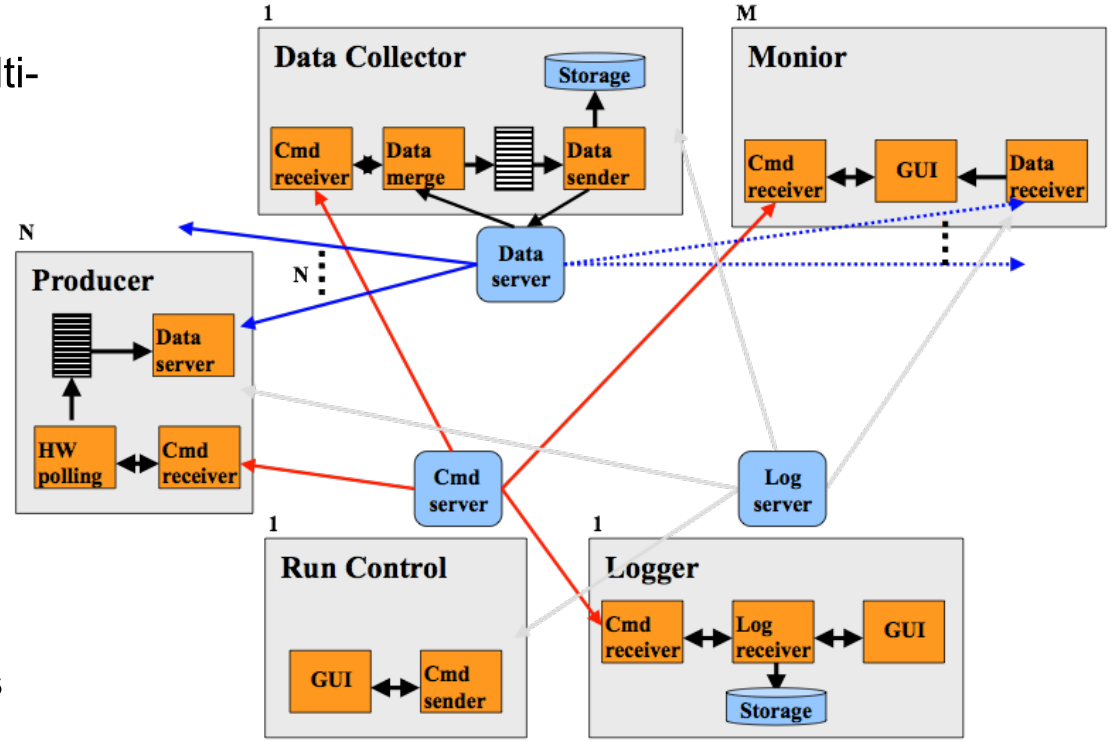

http://projects.hepforge.org/eudaq/

DAQ: Integration Concept

- How to integrate the DUT hardware with the EUDET beam telescope?
  - different groups with different detector technologies and different, pre-existing DAQ systems
- Use completely different hardware and DAQ for the DUT and the telescope
- Two levels of integration possible:
  - "easy" solution: at trigger level
  - full integration on DAQ software level

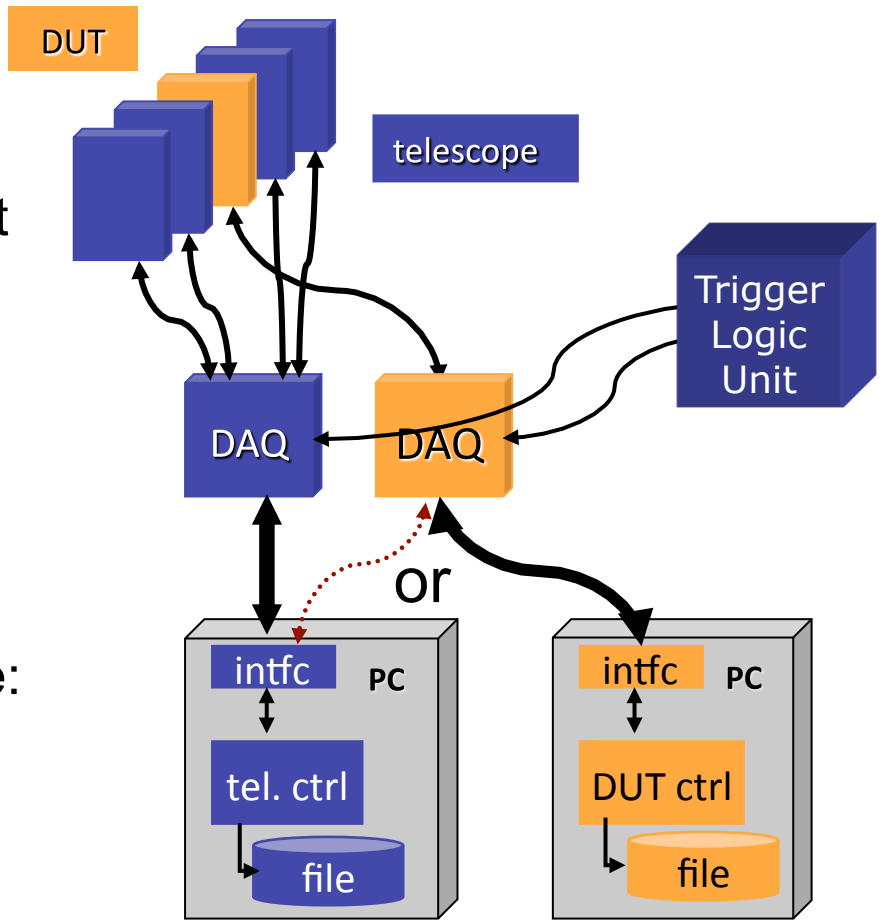

(Emlyn Corrin/DPNC)

RawDataEvent

- Users no longer need to define their own Event class
- RawDataEvent provides a container for arbitrary blocks of bytes, labelled with a type
- One less step for full integration into DAQ

(Emlyn Corrin/DPNC)

DataConverterPlugin

- Provides a way to convert from RawDataEvent into either:
  - StandardEvent, for online monitoring
  - LCIO, for offline analysis
- Allows users to easily benefit from online monitoring and analysis, keeping their custom code in one location

(Emlyn Corrin/DPNC)

PluginManager

- Takes care of converting raw events from the telescope+DUT into more understandable StandardEvent / LCIO
- Uses the RawDataEvent's type to find the corresponding DataConverterPlugins for each part of the data

Analysis & Reconstruction Software

EUTelescope:

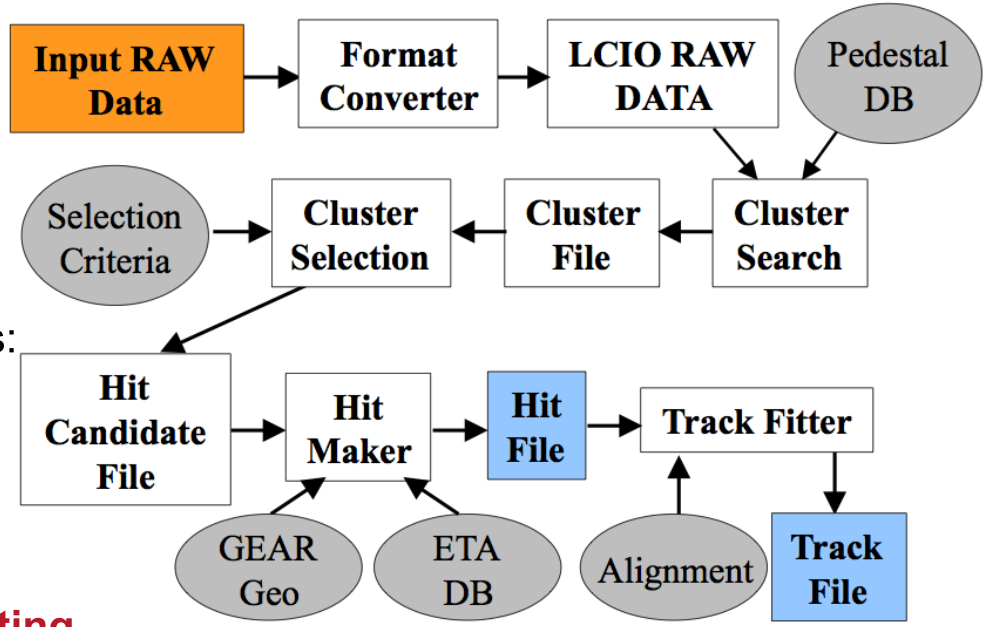

- Set of relevant high level objects (like tracks or space points) to characterize the DUT
- Histograms of important figures of merit.
- Based on available/tested software tools:
  - Single sensor analysis → **sucimaPix** (INFN)
  - Eta function correction → **MAF** (IPHC)
  - Track fitting → **Analytical track fitting** and straight line fitting
  - Alignment → **Millepede II**
  - Framework → ILC Core software = **Marlin + LCIO + GEAR + (R)AIDA + CED**
- Sticking to the ILC de-facto standard offers the possibility to easily use the GRID
- Each module is implemented in a Marlin processor
- execute all of them together, or stop after every single step

DAQ: Users & Producers

- Direct implementation into EUDAQ is now 'standard' and easy
- New 'plugin'-Mechanism really makes life 'even easier'
- Users are in general very convinced about 'ease-of-use' and fast implementation
- TLU is a real 'seller'

Usage of EUDAQ

- Altro - Bonn (Martin Killenberg)
- APIX - Atlas Pixels (Georg Troska)
- DEPFET - Bonn (Julia Fourletova)
- FORTIS/SPIDER - Bristol (David Cussans)
- MimoRoma - INFN (Toto)
- MVD - DESY (Silvia Bonfanti)
- PixelMan - Freiburg (Uwe Renz)
- SITRA - Santander (Javier Gonzalez Sanchez)
- Taki - Mannheim (Christian Takacs / Ivan Peric)
- Timepix - Bonn (Martin Killenberg)
- Atlas TRT (Ilja Slepnev)

Usage of EUTelescope

- Depfet
- Atlas Pixels
- Atlas TRT
- And many more

There some groups (LHC) complain the 'bulkiness' of the framework for a testbeam environment

DAQ: Pros & Cons

Pros:

- Lightweight & easy to use
- Plugin-Mechanism
- Central TLU
- Multi-Threaded

Cons:

- VME readout suboptimal
- Multi-Threaded

EUDAQ for AIDA?

What is needed?

- Tagging of events & clock distribution: TLU will support this next year (may need a 'better' TLU for AIDA and interface to Calice clock distribution)
- Scalability: Currently, one central data-collector, could easily be decentralized, need still a central RunControl
- Performance: Need to do the math, software framework achieves 'normal' network performance (Bandwidth/2), VME is underperforment, need likely 10 Gbit hardware
- Slow Control System: nothing implemented
- Metadata: On file, should likely move to a DB
- Manpower: Emlyn Corrin, need him+more

Conclusions

- EUDAQ is a modular and performent DAQ system
- Used successfully within JRA1, TPC-groups may follow.
- Easy user-integration, full integration in DAQ framework now 'standard'
- EUDAQ could serve as DAQ for AIDA with the right boundary conditions:
  - Manpower must be assured
  - Some hardware needed ('better' TLU, 10 Gbit, storage)
- Still need separate Slow Control System (DCS?), maybe with lightweight interface to EUDAQ.