# Simulation and Study of ILD Muon System

N. D'Ascenzo, A. Galkin,
V. Galkin, D.Ossetsky, V. Saveliev
National Research Nuclear University, Russia / DESY

U. Schneekloth
DESY

# The Magnet and Muon System of ILD

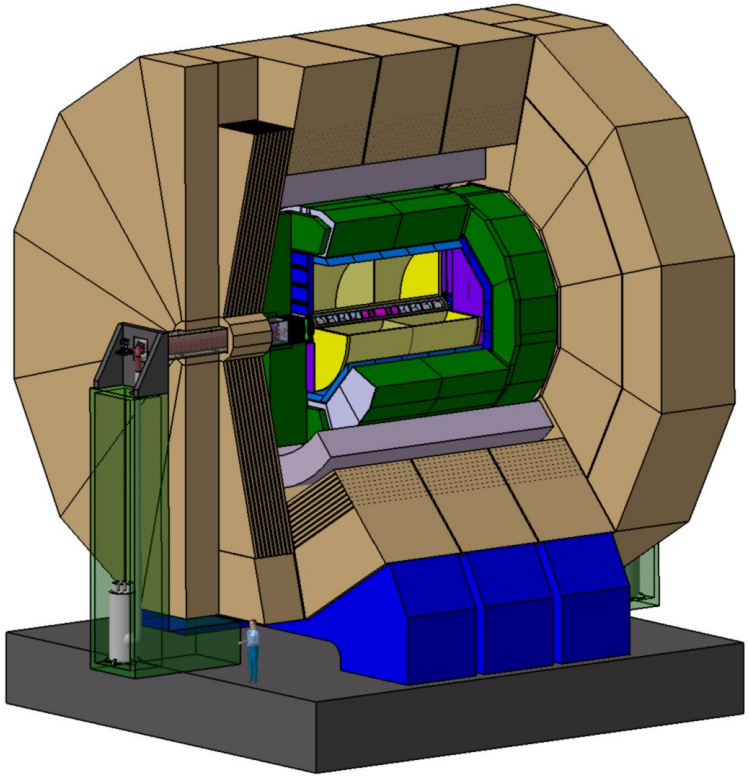

*ILD detector for the International Linear Collider*

The task of the muon system in ILD is the identification of muons and tracking (PFA segment),
in addition as a Tail Catcher for HCAL

**Cryostat:** *Detailed Geometry*
- *Instrumentation 2 double scintillator layers*

**Coil:** *Detailed Geometry,*
- *Coil Segmentation*

**Yoke**: *Detailed Geometry*
- *Barrel: 10x(100+40) +3x(560 +40) mm*
- *EndCup: 10x(100+40) +2x(560+40) mm*

**Muon System:**
- *Scintillator Double Sensitive Layers in the Yoke Gaps*

# New Geometry of the ILD Muon System

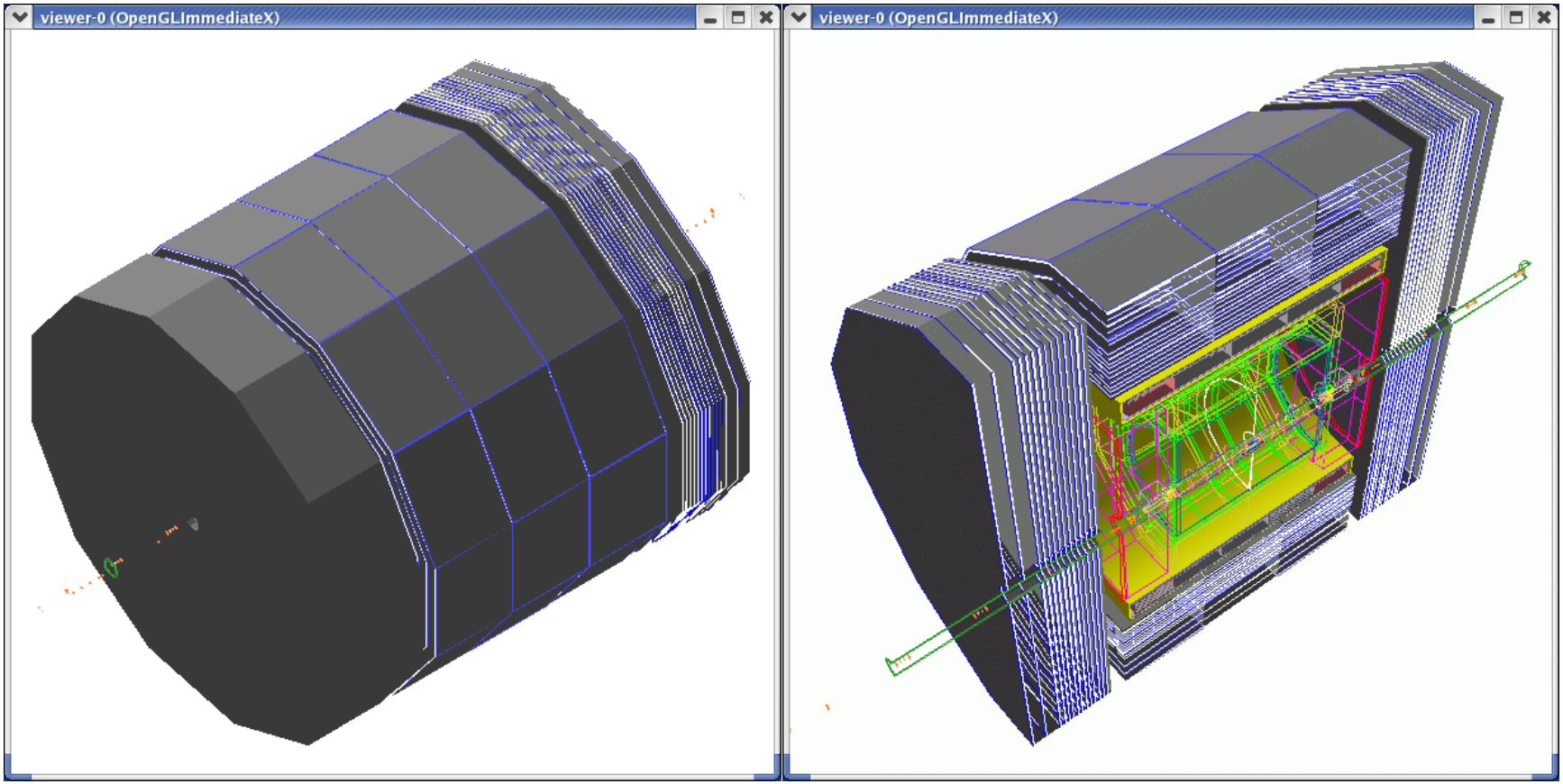


*New geometry of the ILD detector in MOKKA.*

# The New Geometry of the Coil

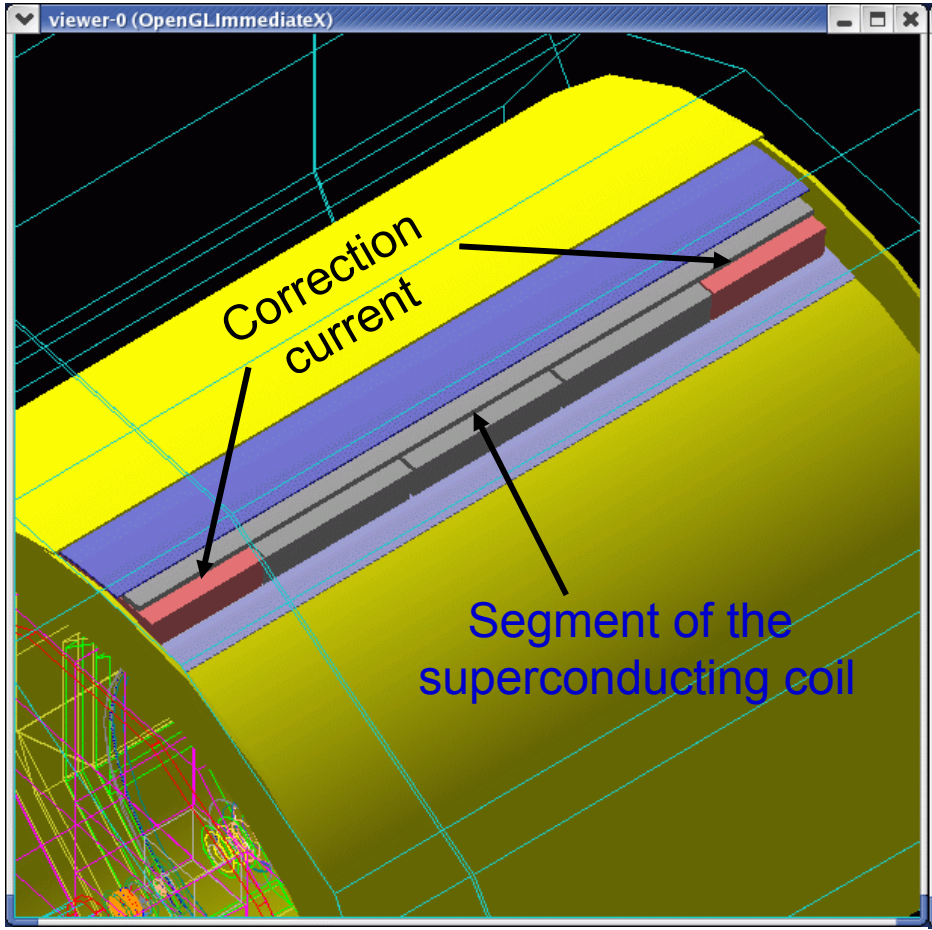


*New geometry of the ILD detector in MOKKA: Zoom inside the cryostat*

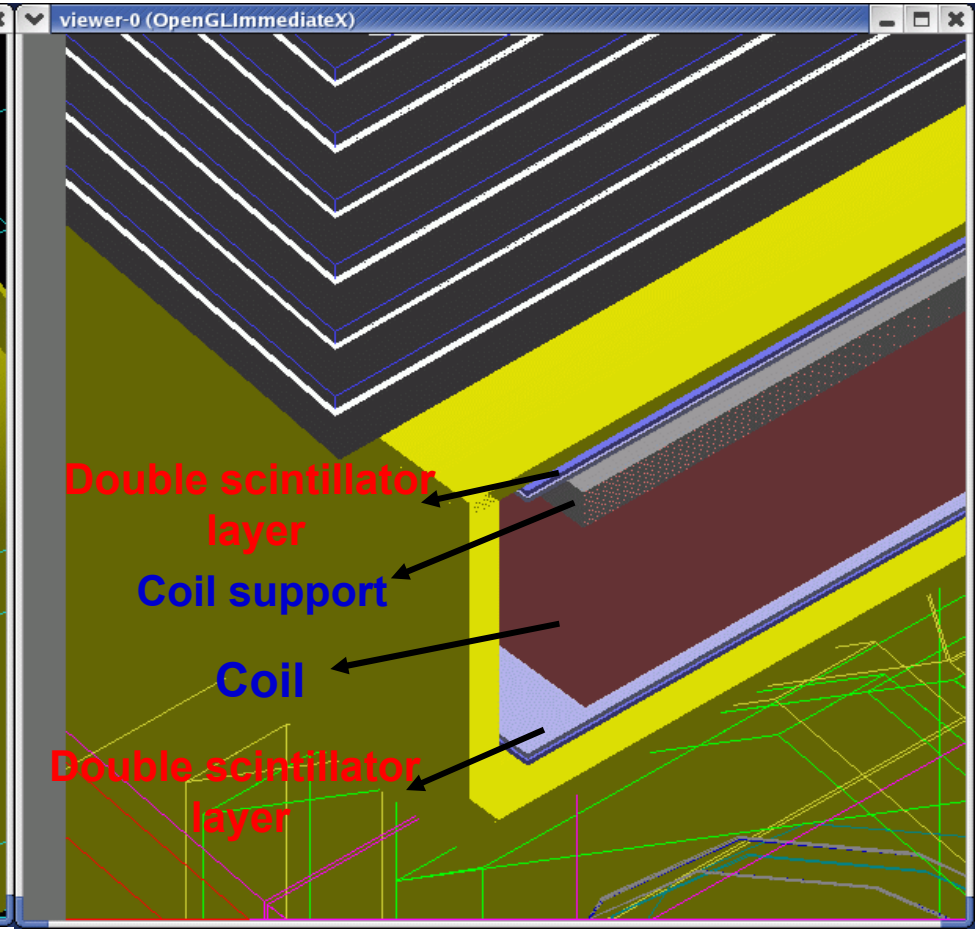


*New geometry of the ILD detector in MOKKA. Zoom inside the cryostat*

# The muon system

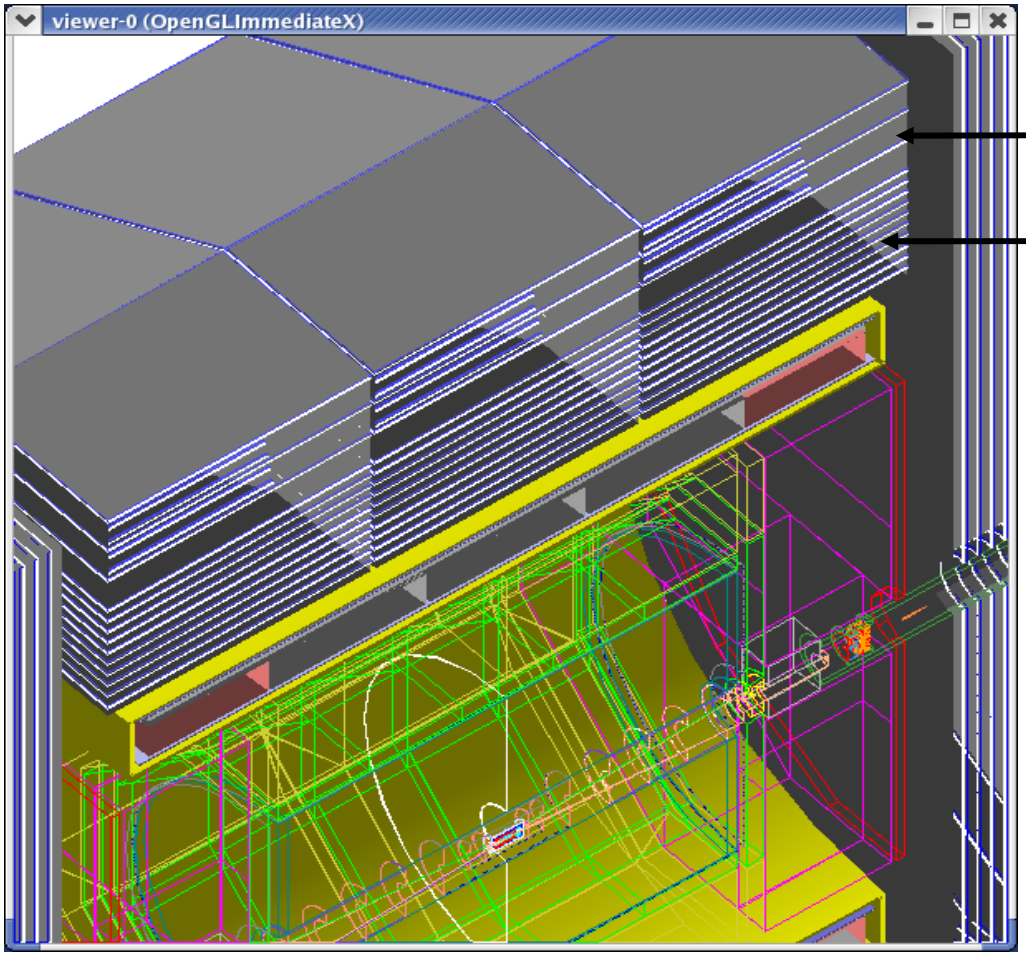


**Additional scintillator layers**

**10 scintillator layers**

*Geometry of the ILD detector in MOKKA.*
*Details of the muon system – barrel*

# Muons in the New Geometry

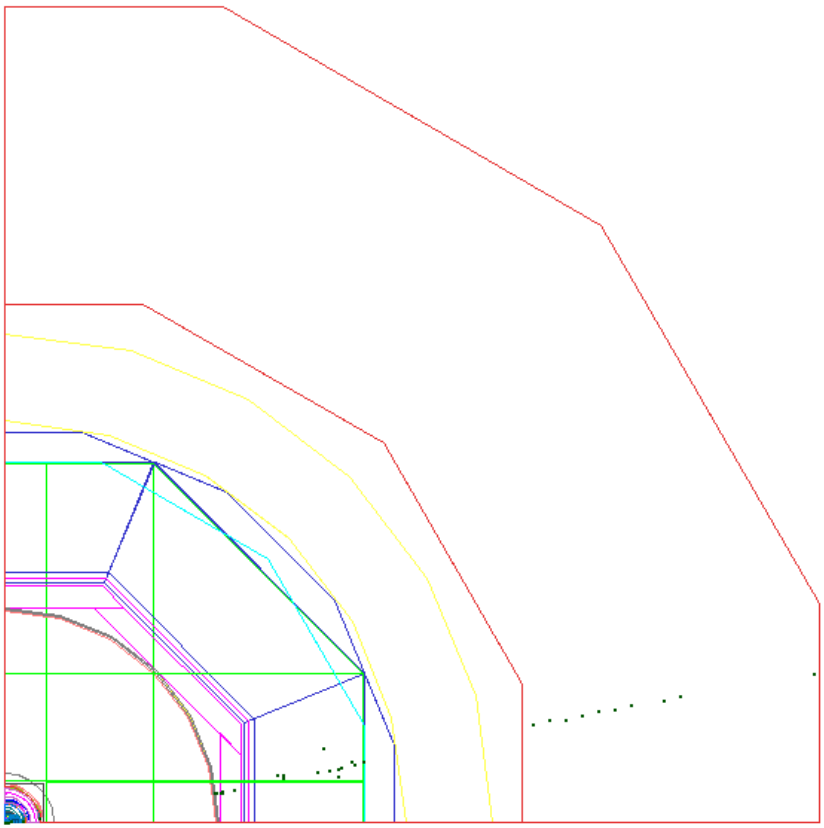

*20 GeV muon simulated in the* ***LOI -*** *ILD detector geometry*

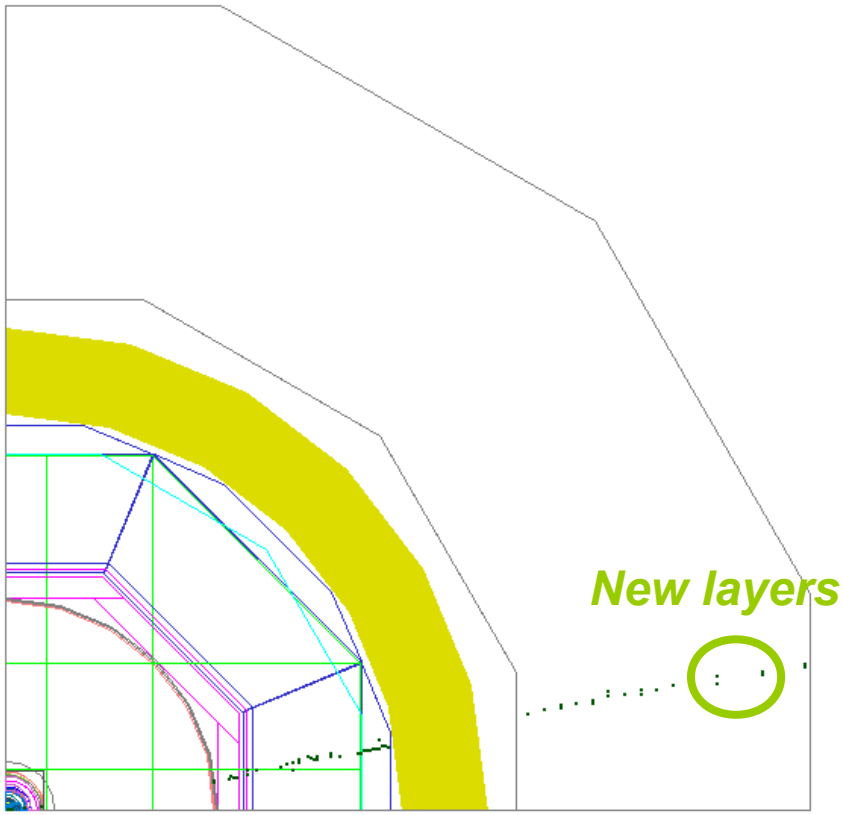


*20 GeV muon simulated in the* ***new*** *ILD detector geometry*

# Performance Study: Muons in the ILD

- The **muon momentum** is measured by the trackers (PFA).
- Simple **muon id**:  Identify hits in muon system

# Study of the muon momentum resolution

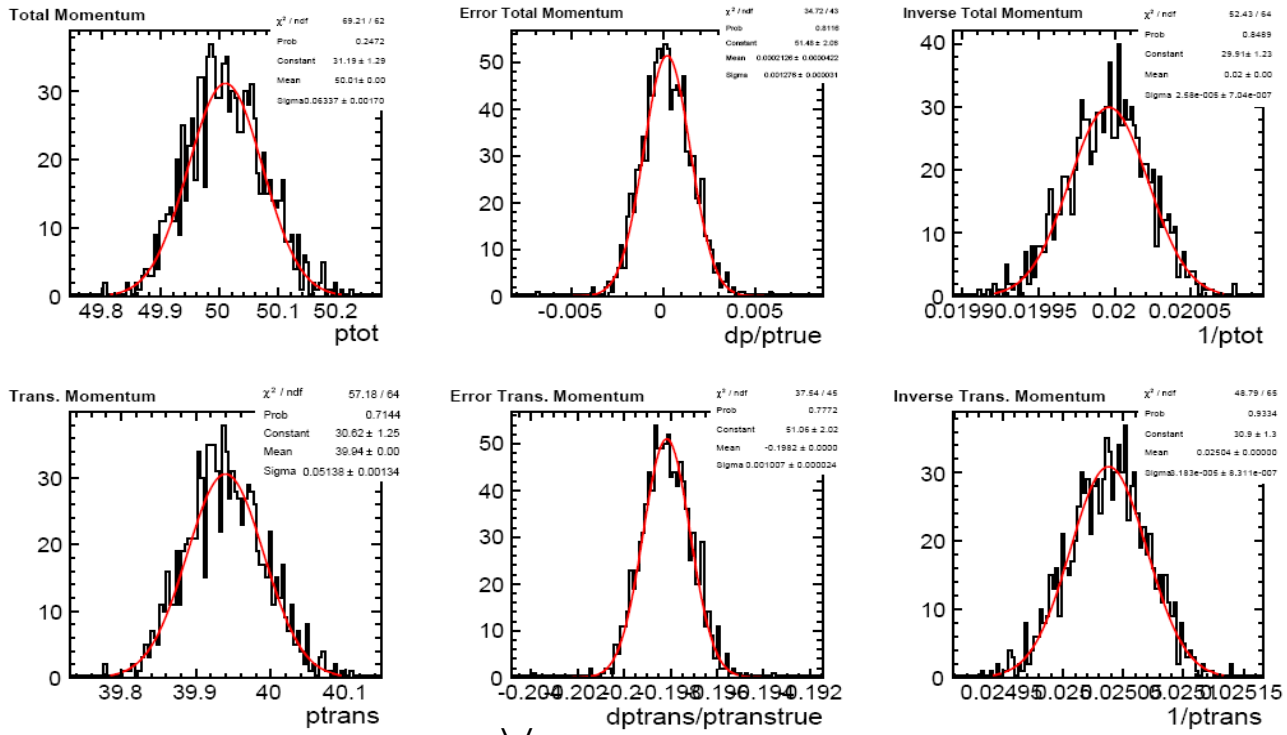


*Reference distributions for a 50 GeV muon*

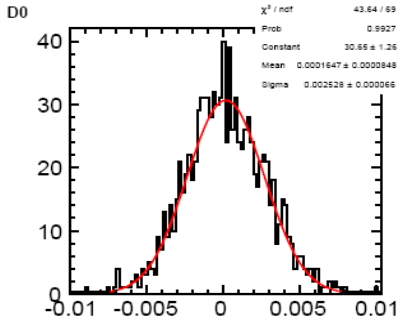


∀ **DATA AND TOOLS**

- Scan of muon energies between 1 and 50 GeV, with 1 GeV step, Angle $\Theta = 53°$ $\phi = 45°$
- 0000 event per point
- Track reconstruction with PANDORA PFA

# Muon momentum resolution

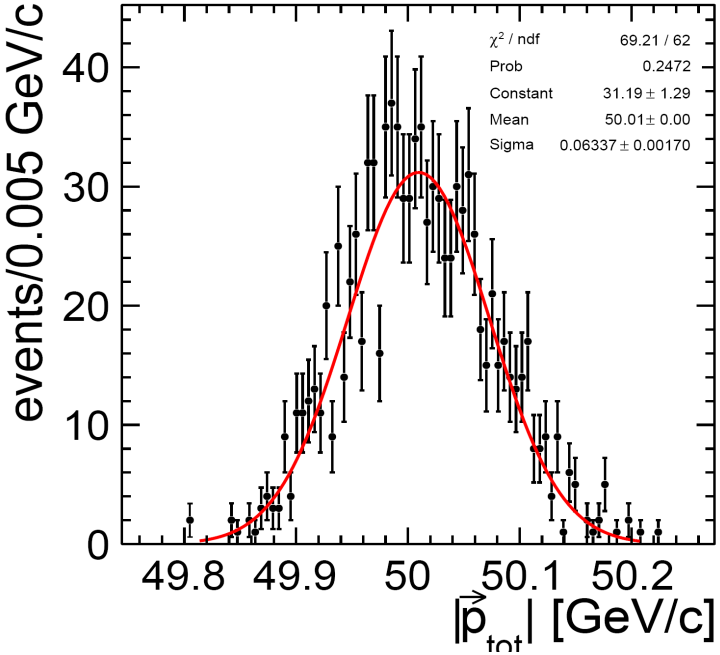


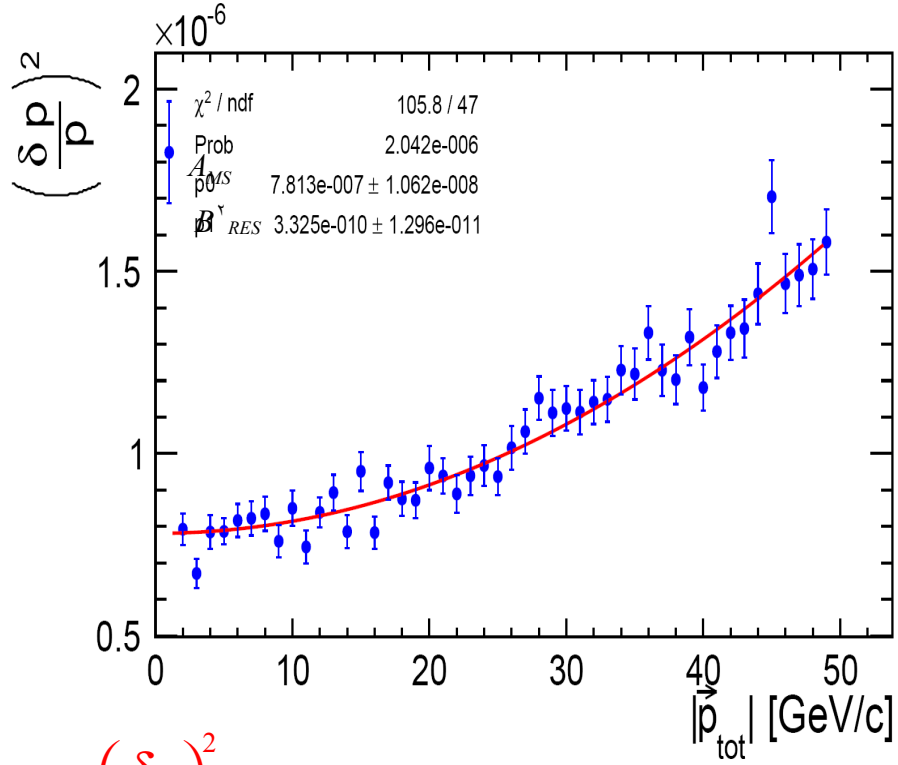


$$\left(\frac{\delta p}{p}\right)^2 = A_{MS}^2 + (B_{RES} \times p)^2$$

*50 GeV muons reconstruction in the ILD detector (PANDORA PFA)*

*Muon momentum resultion of the ILD detector* ***Glukstern fit (red)*** *on simulated data (blue)*

# Summary

- A new Geometry of the Magnet Yoke and Coils, and Muon System is developed and ready for implementation in MOKKA,
- Optimization of the design of the muon system and magnet under study,
- Simulation studies of muon identification and momentum resolution - first results is promising,
- Algorithm of the muons track segment reconstruction in Muon System and Possibility of Including in the common fit is under development