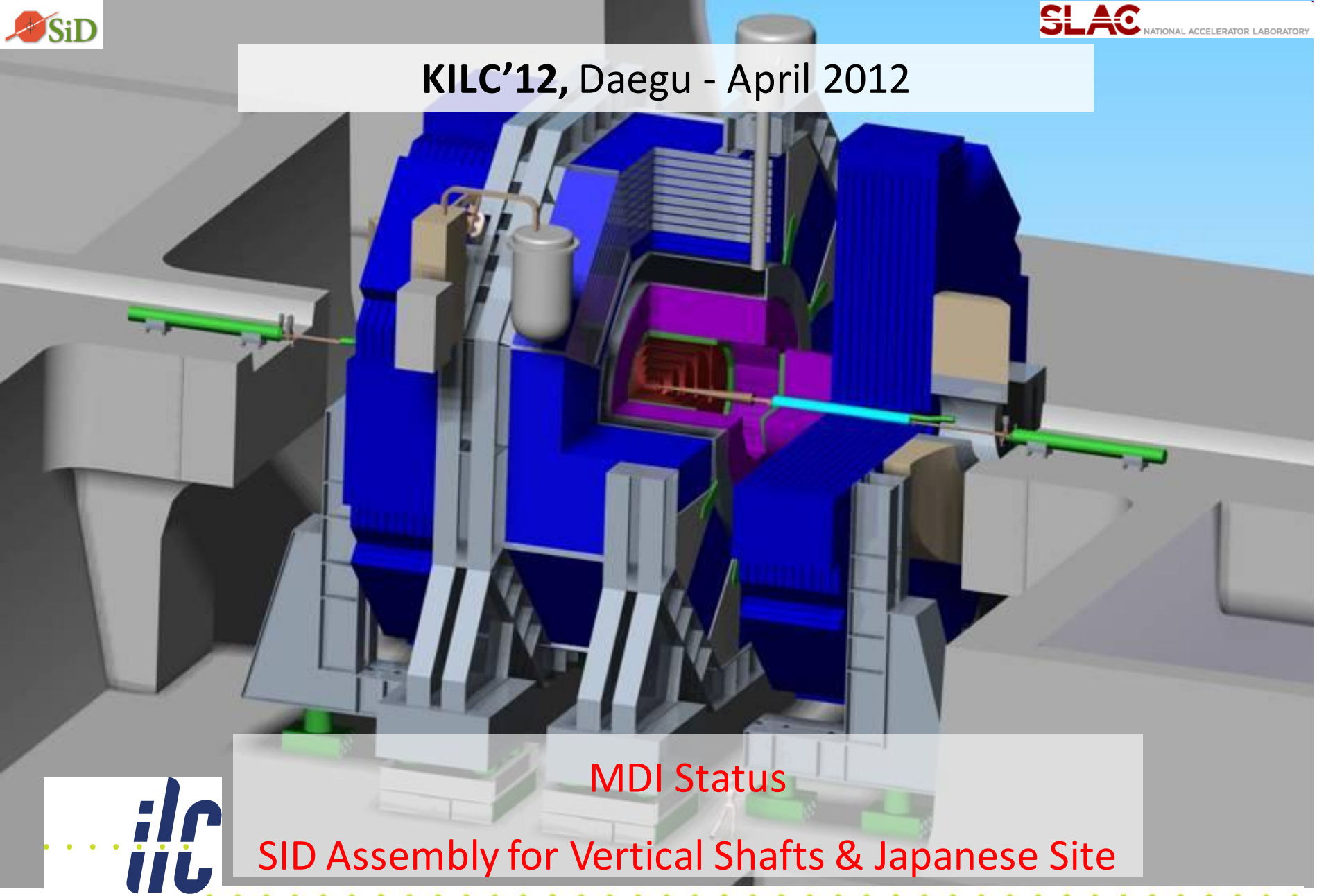

KILC'12, Daegu - April 2012

MDI Status

SID Assembly for Vertical Shafts & Japanese Site

Marco Oriunno, SLAC

The assembly procedure of SID is driven by the its specific design features

Compact design with 5 T Solenoid

Single Ring Barrel

Self Shielded: Stray Fields & Radiation

Short L* with FFS QD0's supported from the doors

Weight breakdown

Barrel Ecal	60
Barrel Hcal	450
Coil	192
Barrel Iron	3287
Total Barrel	**3990**
Endcap Ecal	10
Endcap Hcal	38
Endcap Iron	2100
Pacman	100
Feet	60
BDS	5
Total Door (x1)	**2313**
Total SiD	**8615**

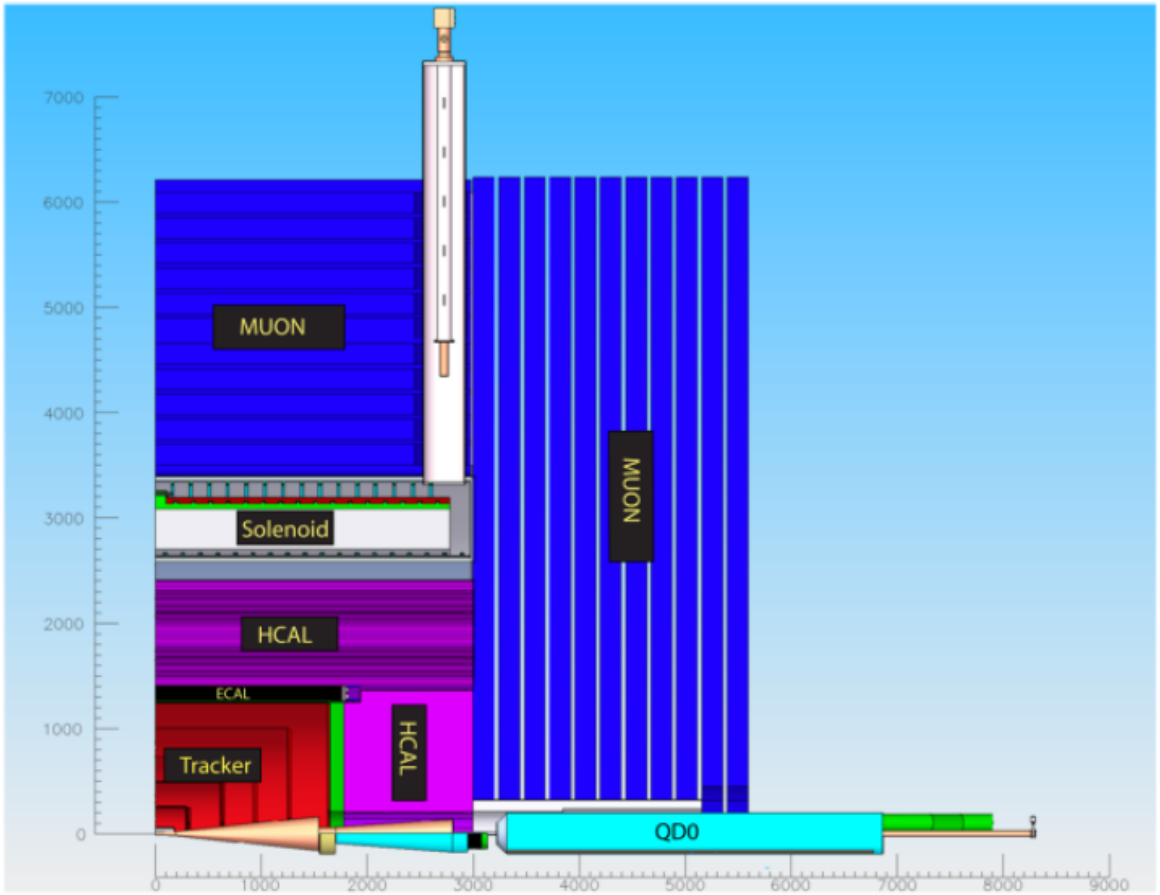

Two basic layouts of the experimental areas are considered, the main difference being the geometry of access tunnels :

- Vertical shafts (Europe, Americas)
- Horizontal shafts (Japan)

1. The assembly procedure will be different for the two sites
2. Both layouts must satisfy push-pull requirements
3. The detector hall must be optimized for costs: benefits vs. features

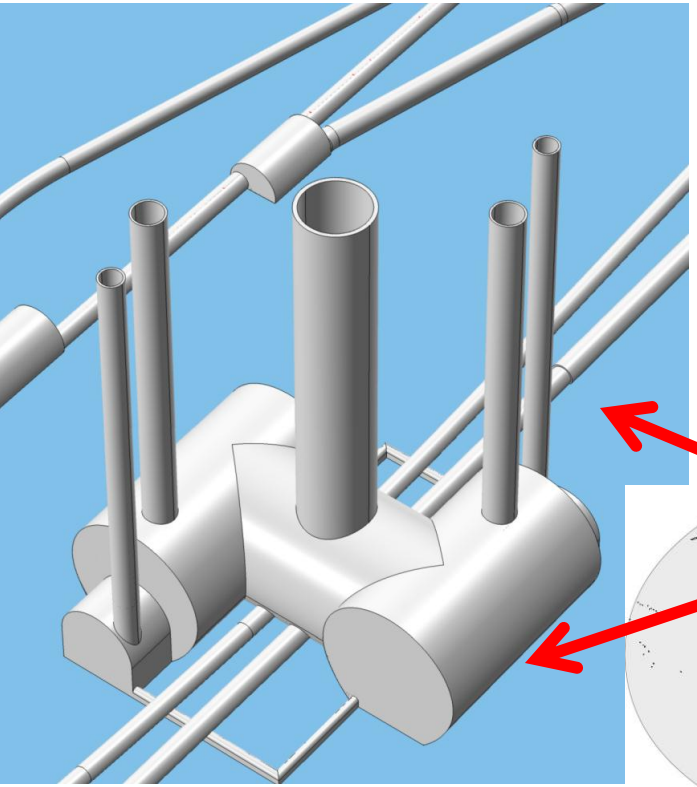

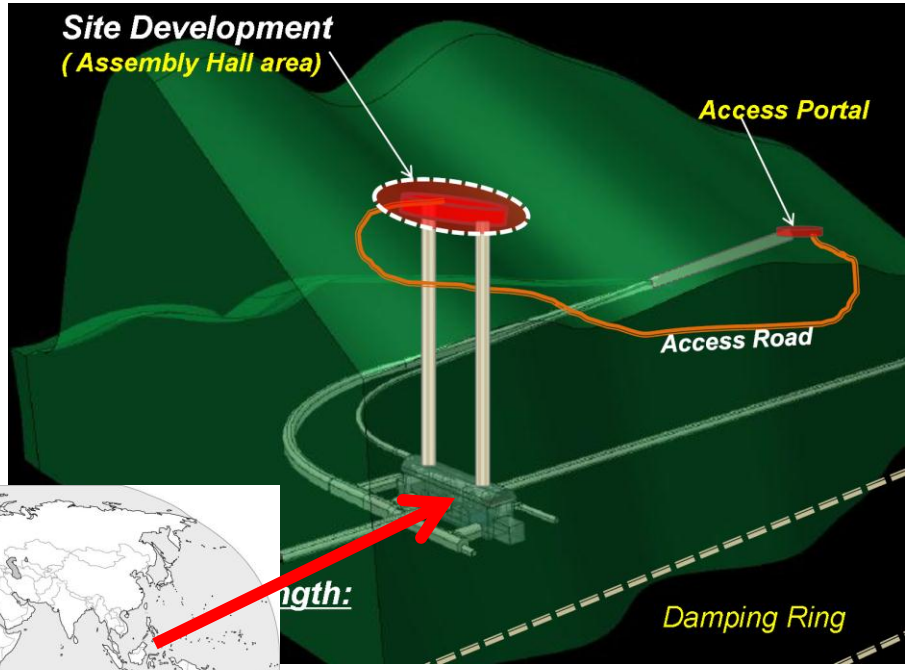

Vertical Shaft Sites
Europe, Americas, Asia

Detector Hall Optimization

Agreed at ALCPG11 (Eugene) that both detectors move on platforms

Common effort MDI-CFS moved to the implementation of the push-pull req's on the RDR 2007 IR Hall.

Found several inconsistencies, i.e. small shaft, narrow cavern, floor depth. Inadequacy of layout to the surface assembly and expected maintenance scenarios

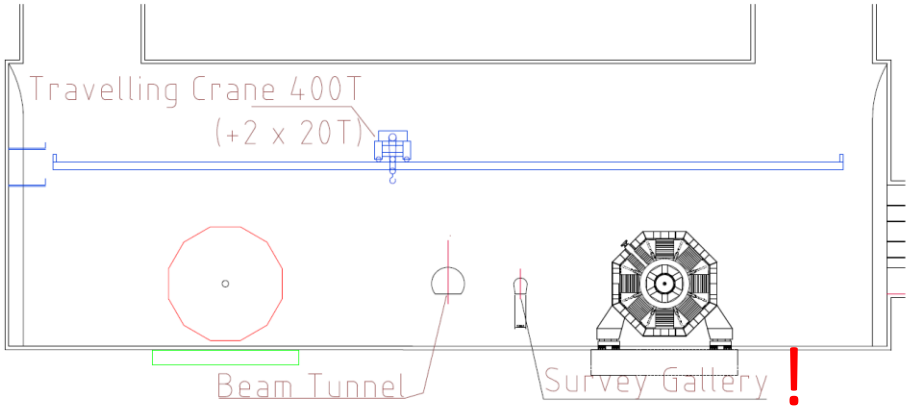

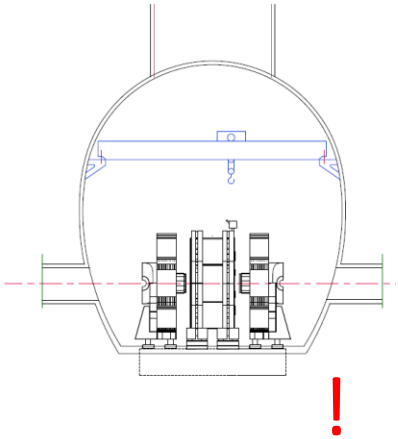

IR Hall 2007

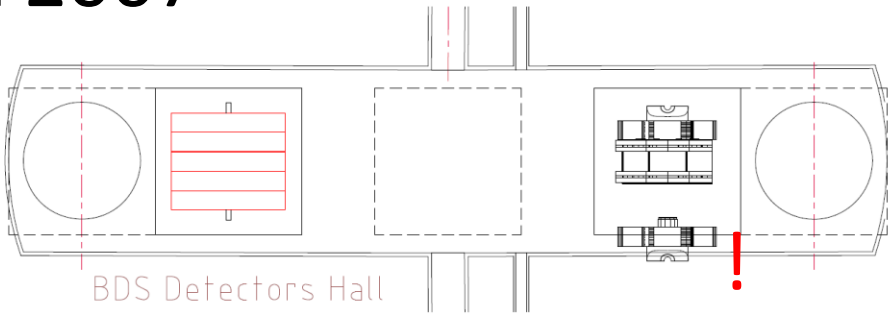

BDS Detectors Hall
120 x 25x 39m
2 shafts Ø16m

London, July 2011

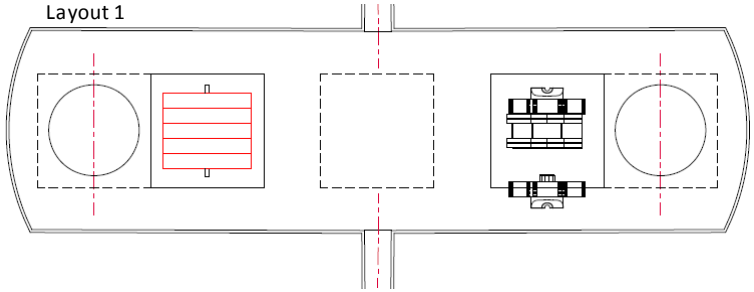

Rating Scale 1÷5 : 1=Low, 5=High

#	Requirement	Layout 1	Layout 2	Layout 3	Layout 4	Layout 5
1	Surface assembly of Magnet	1	4	3	3	4
2	Underground installation of Tracker, Calorimeters and Forwards	1	4	2	2	4
3	Number and Size of Cranes	3	3	3	2	4
4	Costs: Shafts and Halls size	4	2	2	2	3
5	Infrastructures	NA	NA	NA	NA	NA
6	Easy Maintenance, Smooth Operation	2	4	3	2	4
7	Beam Comissioning	1	1	1	4	4
8	Safety	2	4	2	2	4
	Final Score	14	22	16	17	27

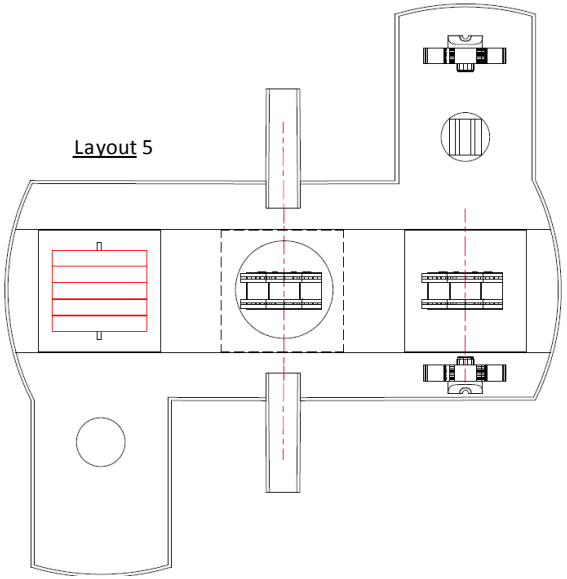

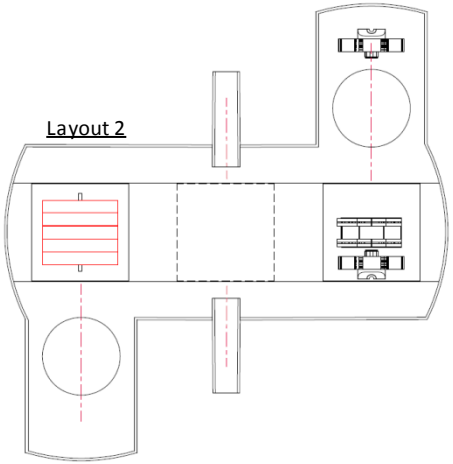

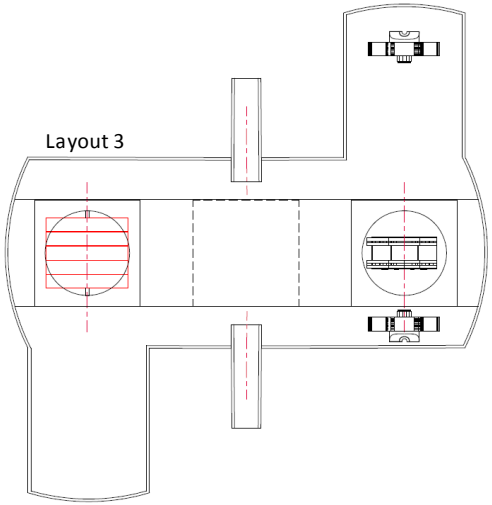

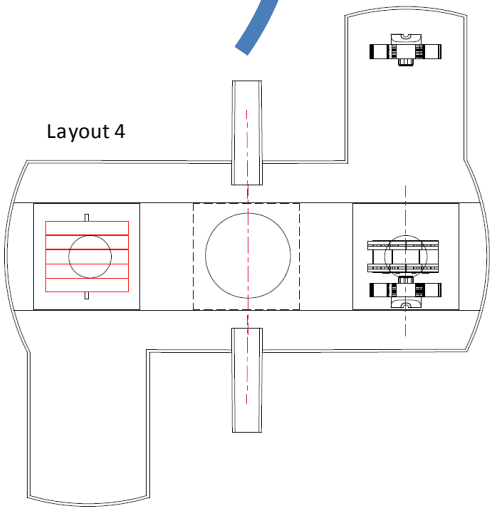

ILC IR layout (LCWS11,Granada)

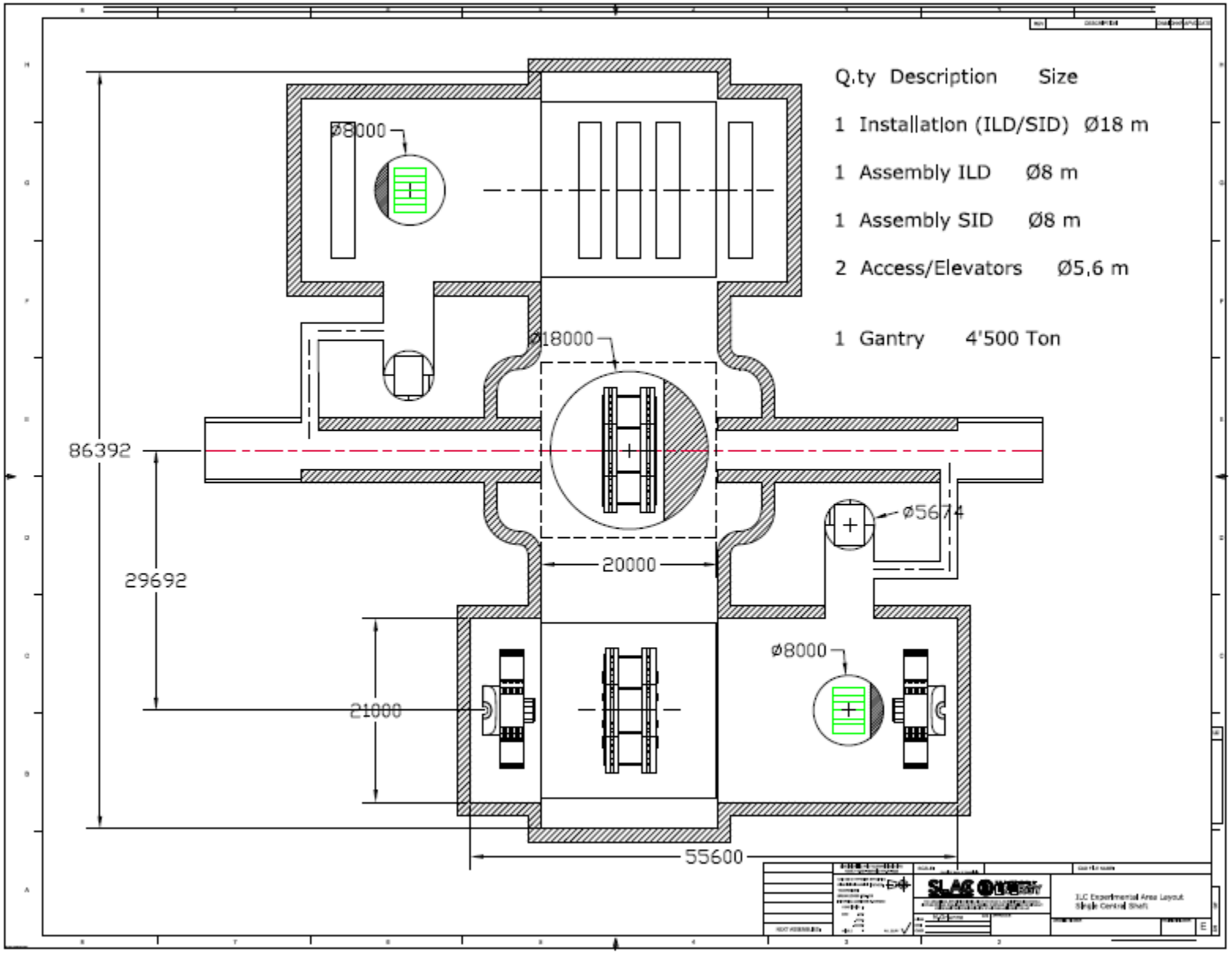

RDR 2007 vs. Granada layout

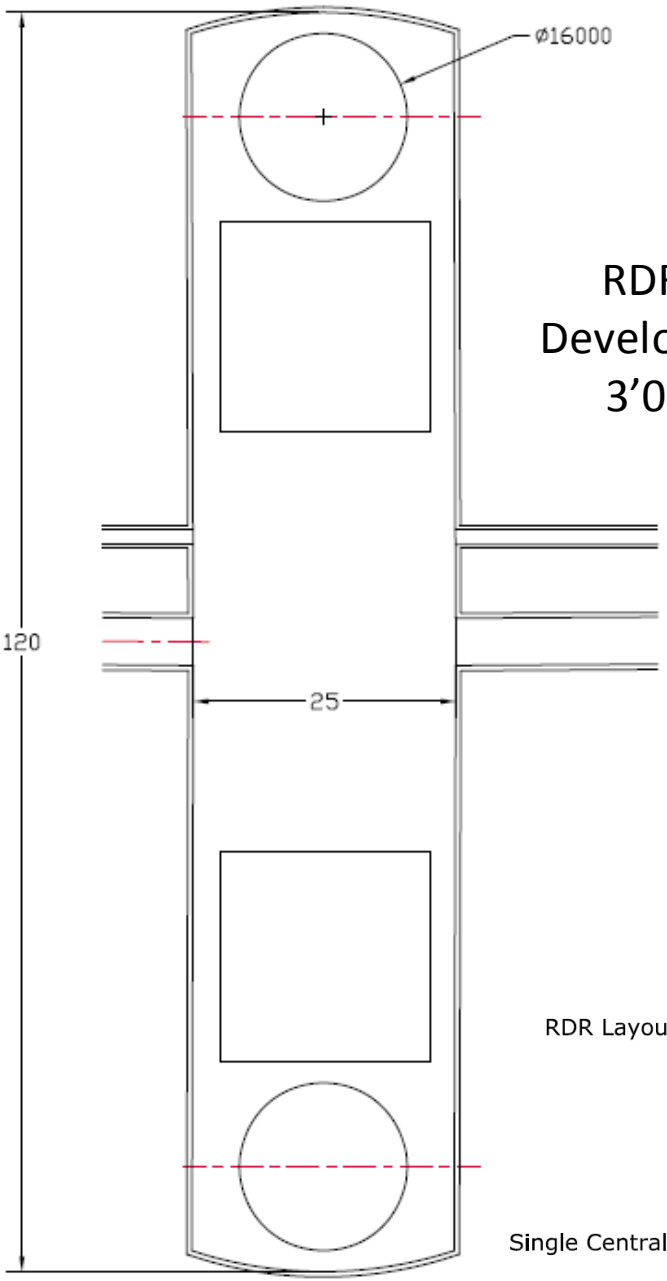

RDR 2007
Developed Area
3’000 m2

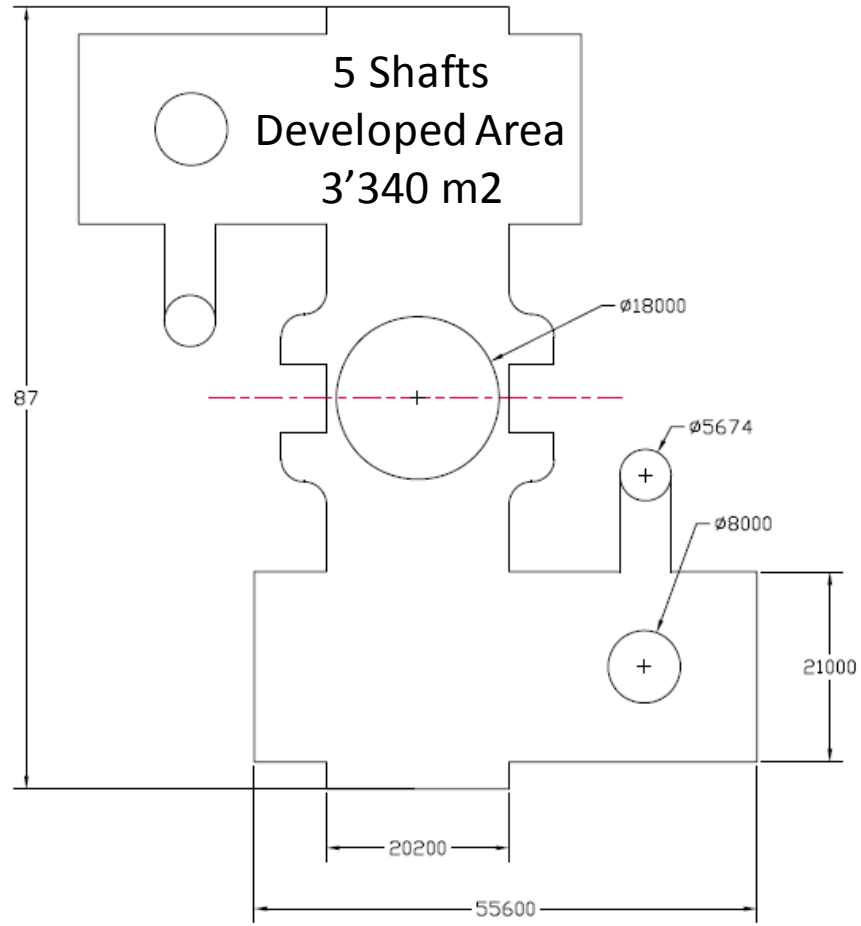

RDR Layout, 2 x 18 m

Single Central Shaft 18m

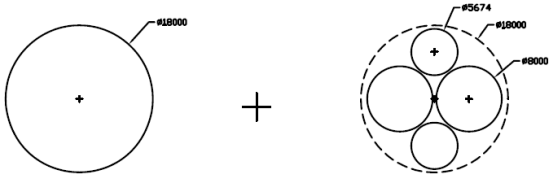

Surface assembly

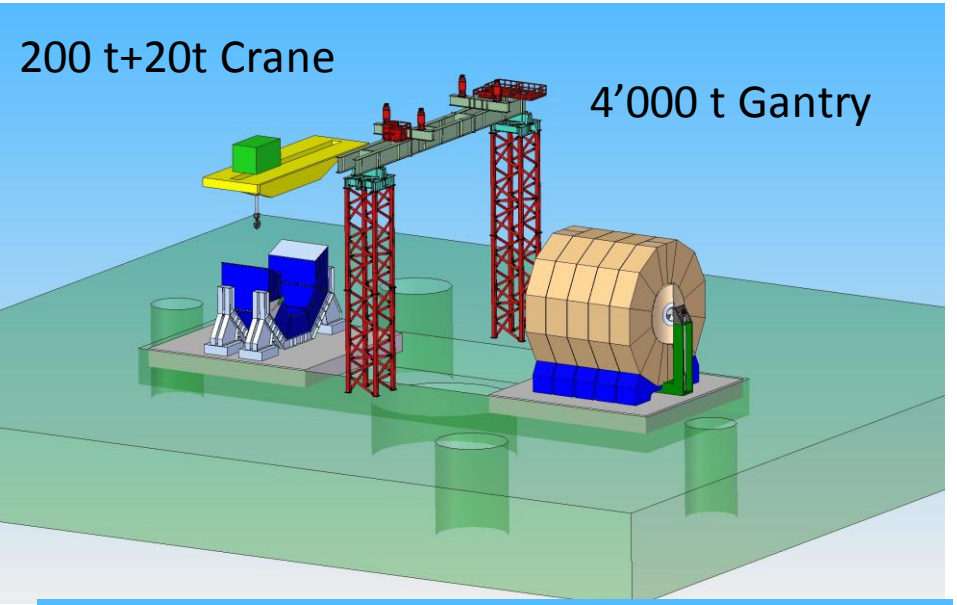

1. Assembly of Iron Doors+Barrel on surface
2. Commissioning of the magnet on surface
3. Large capacity gantry

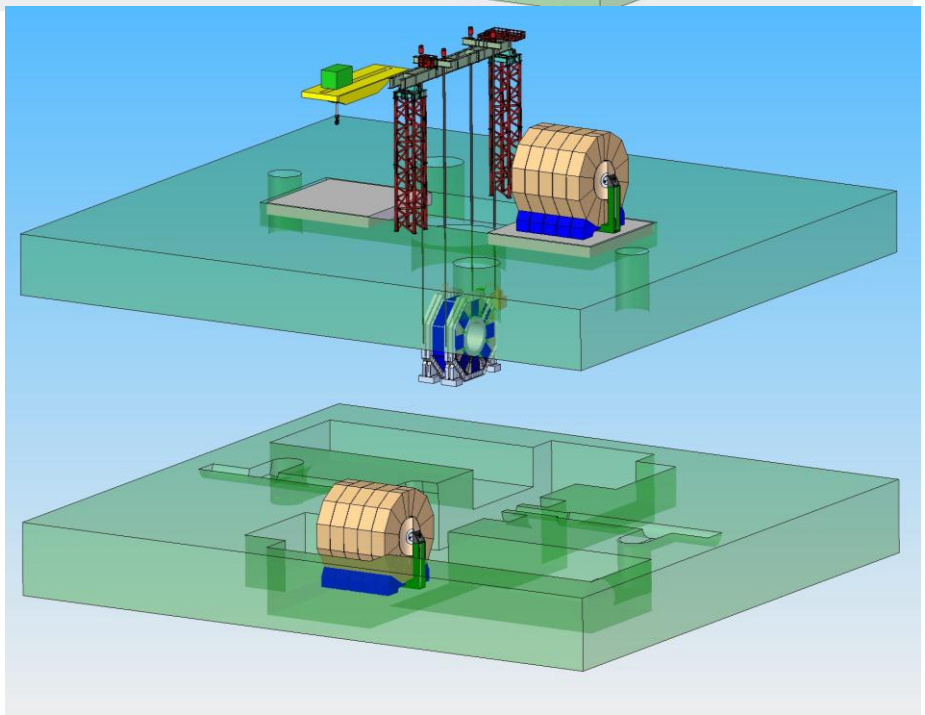

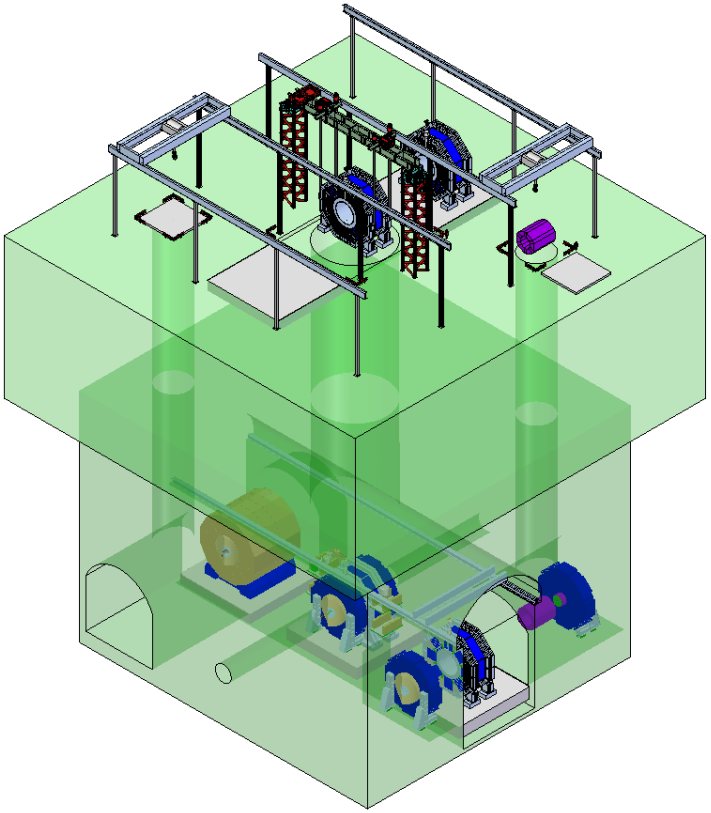

Underground Area

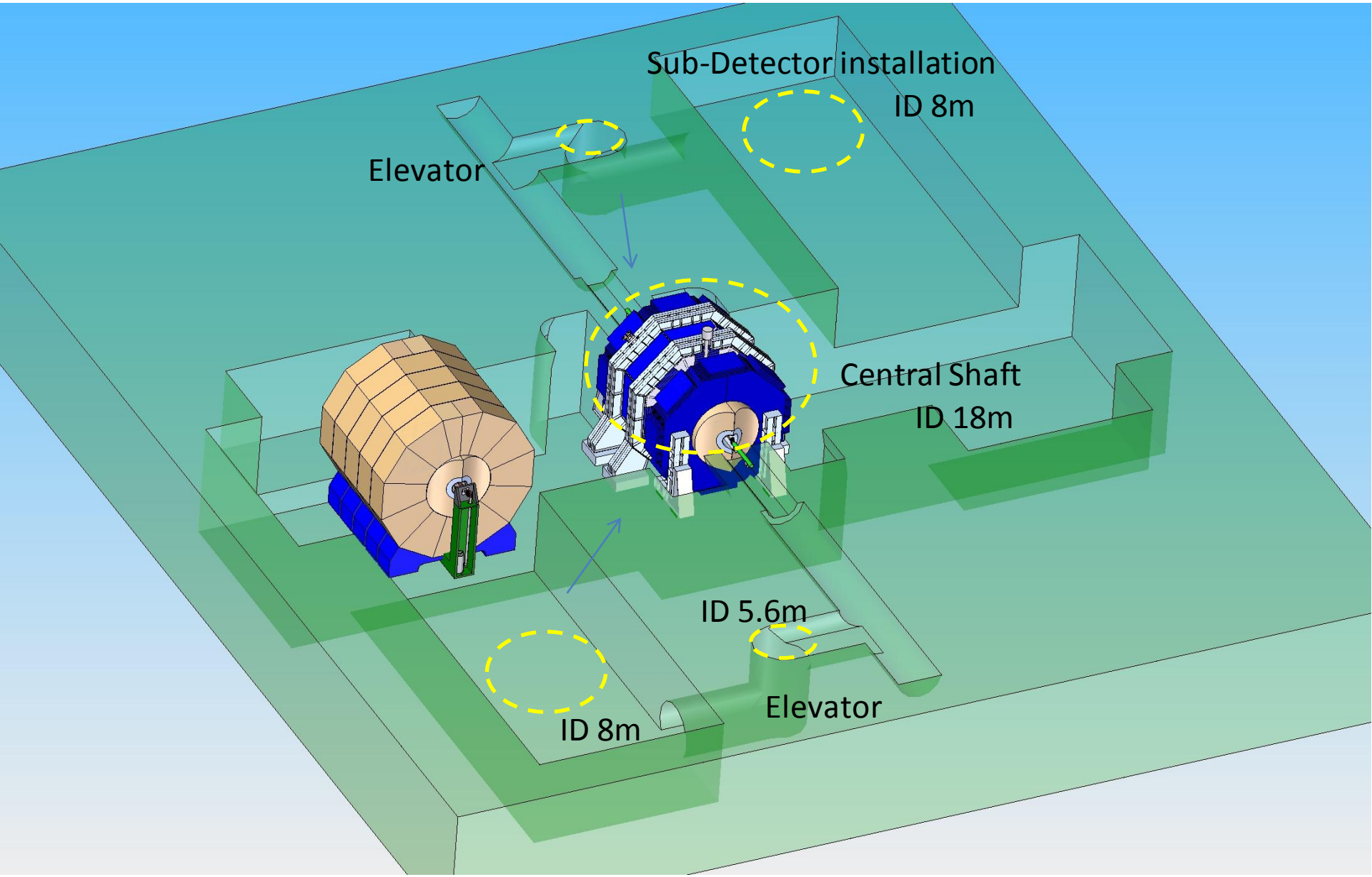

Japanese Site
Horizontal access Tunnels

Detector Hall, Japanese Mountain Site

SLAC, Dec.2011

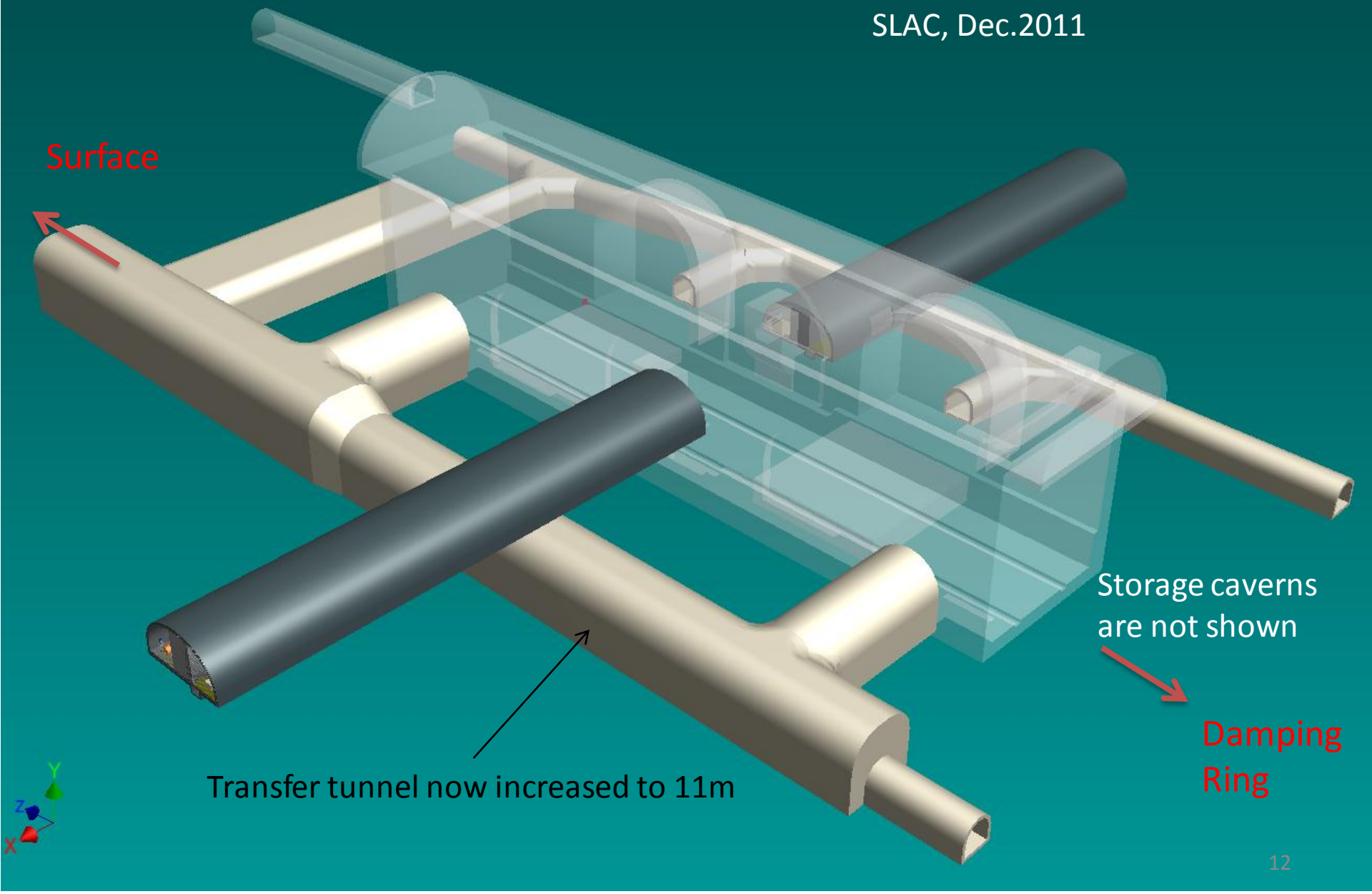

Current Layout, Apr.2012

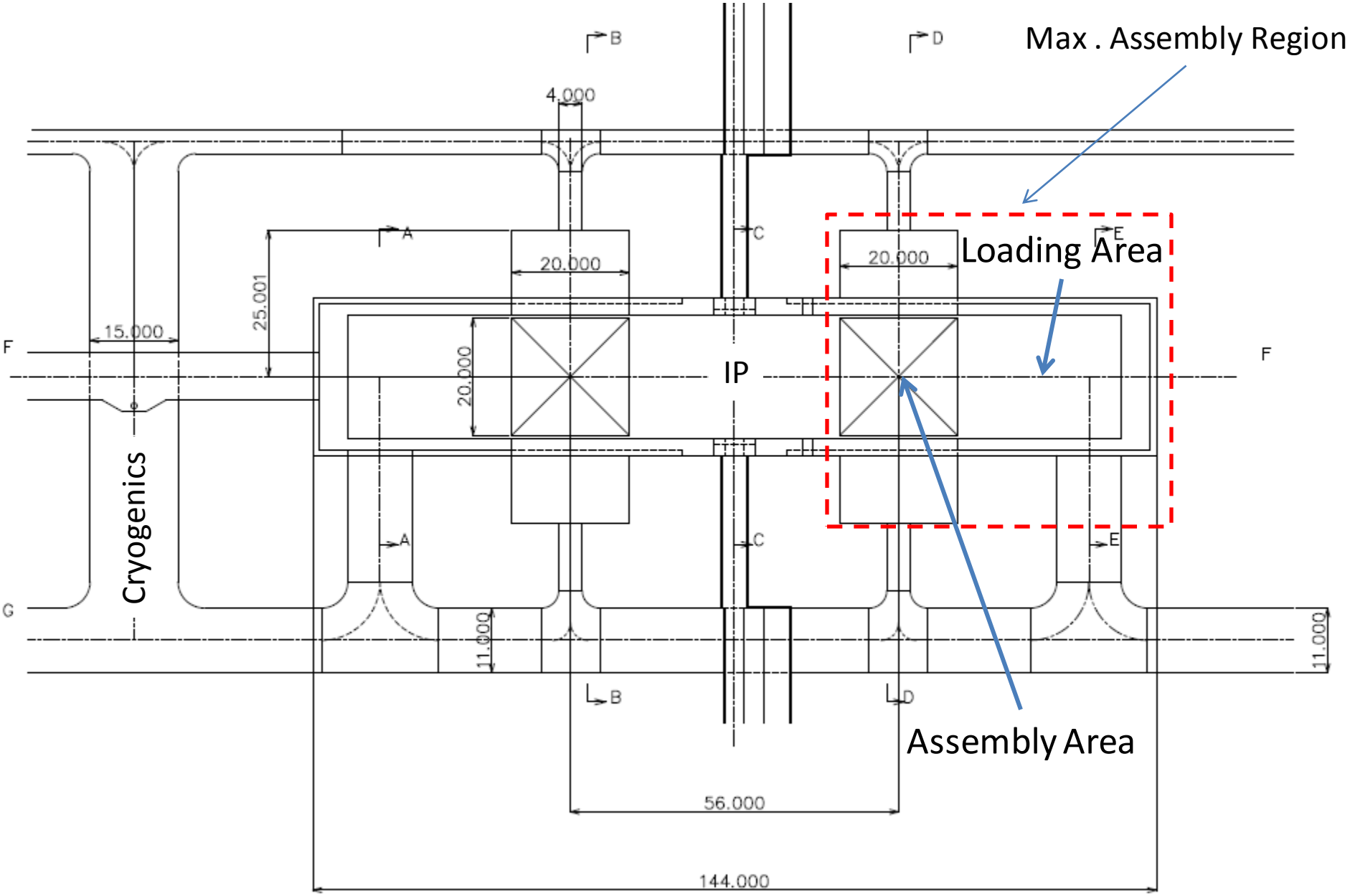

Site Delivery prior the start of the Detector Assembly

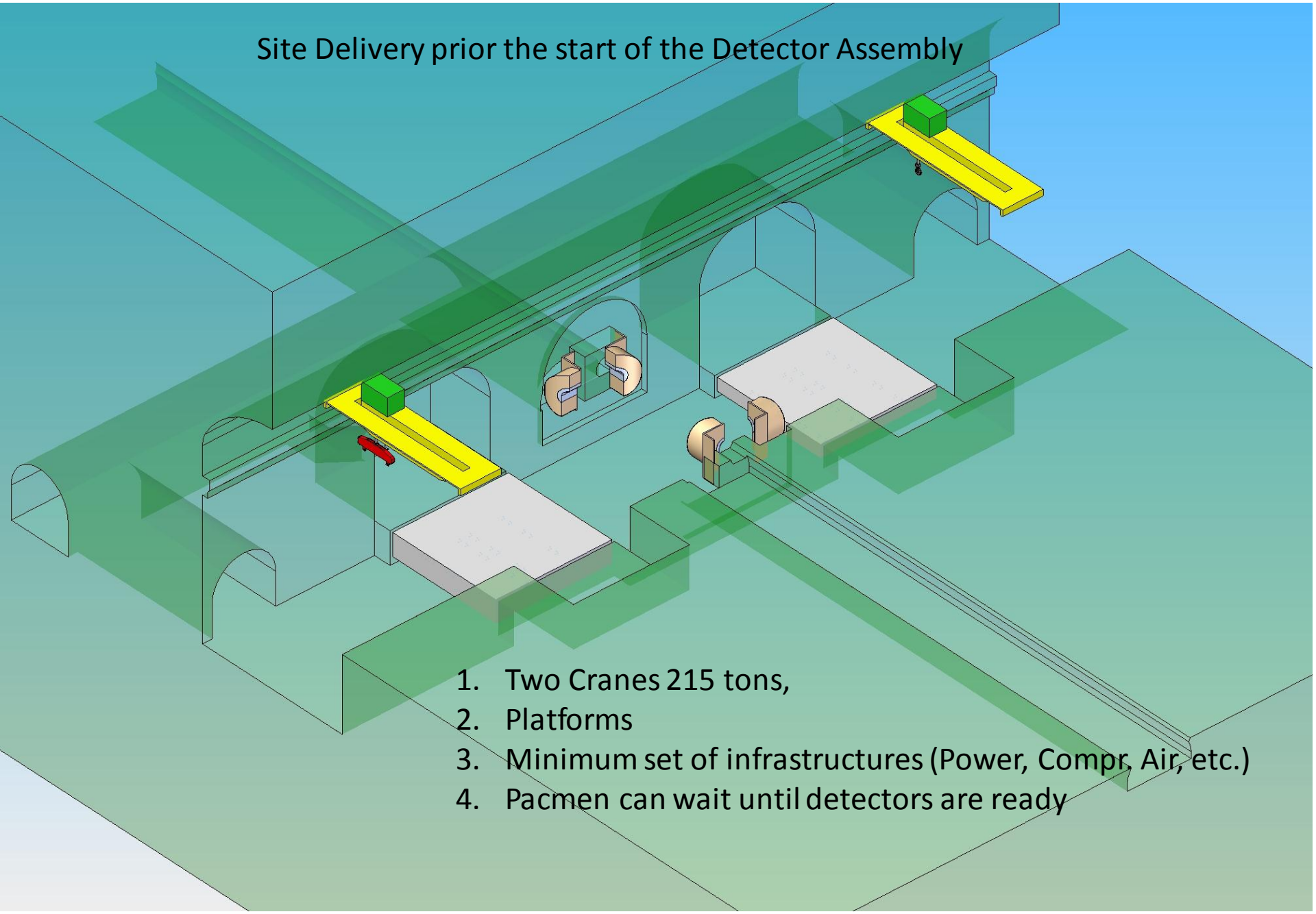

1. Two Cranes 215 tons,
2. Platforms
3. Minimum set of infrastructures (Power, Compr. Air, etc.)
4. Pacmen can wait until detectors are ready

End Door

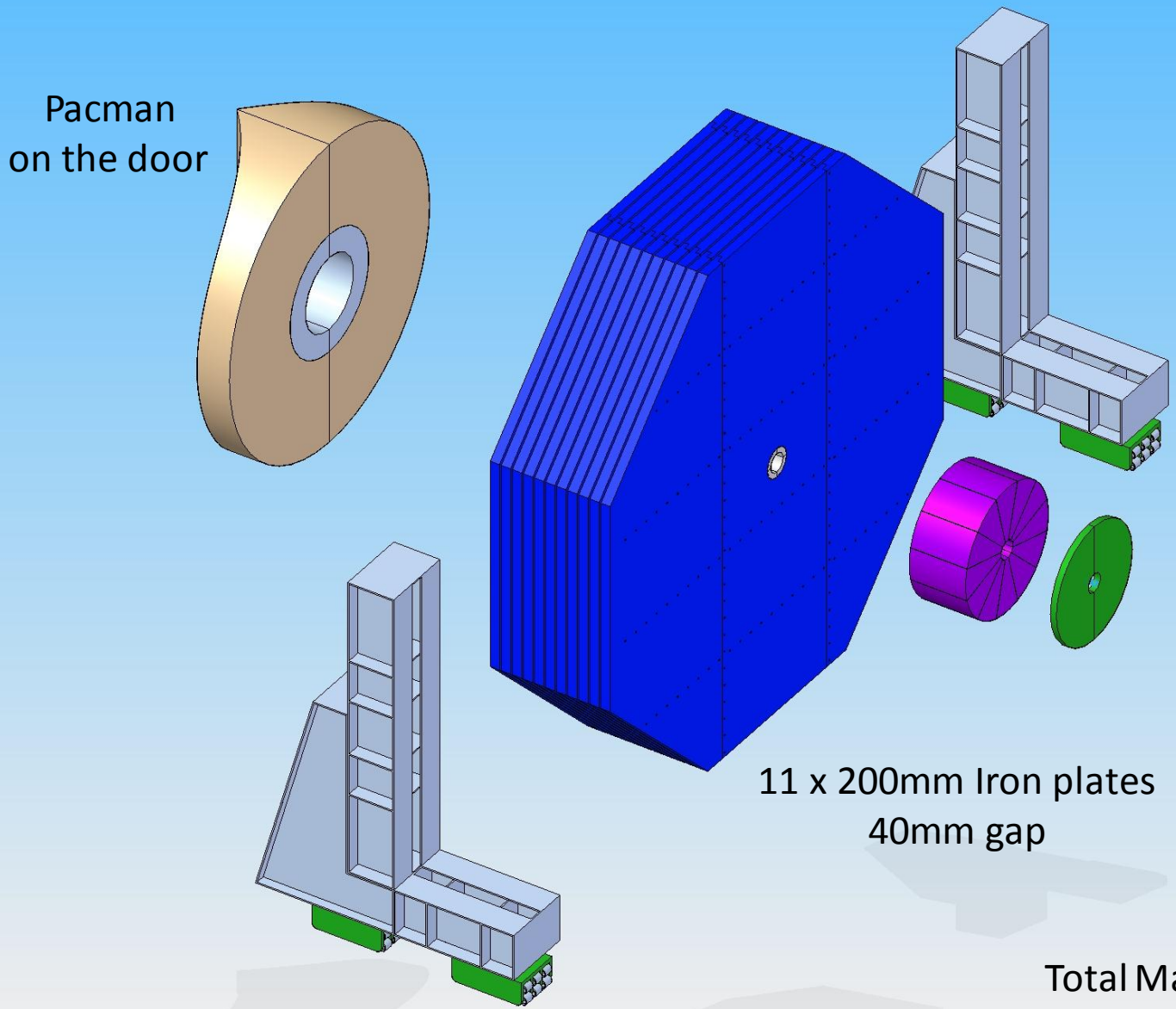

Total Mass ~ 2’300 Tons

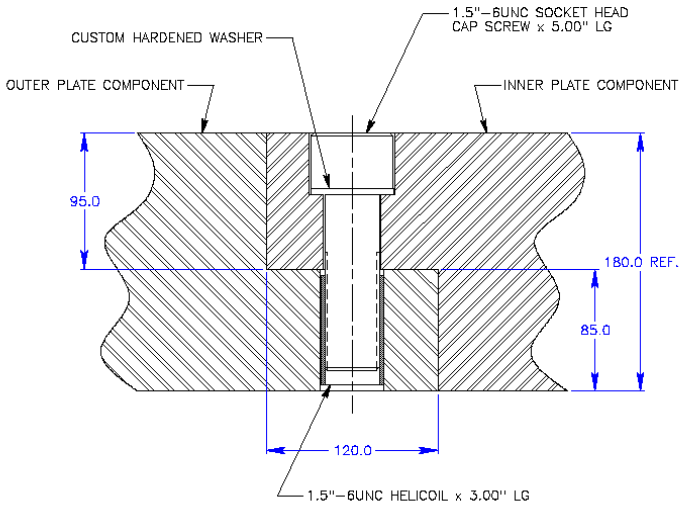

Intraplate connections

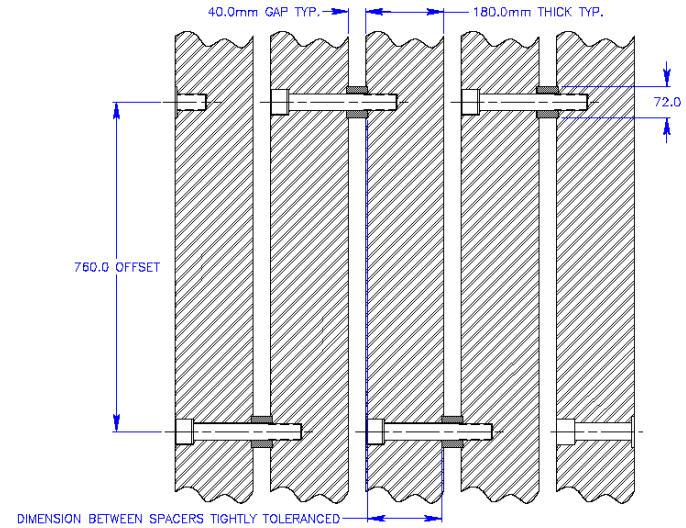

Spacer Offset

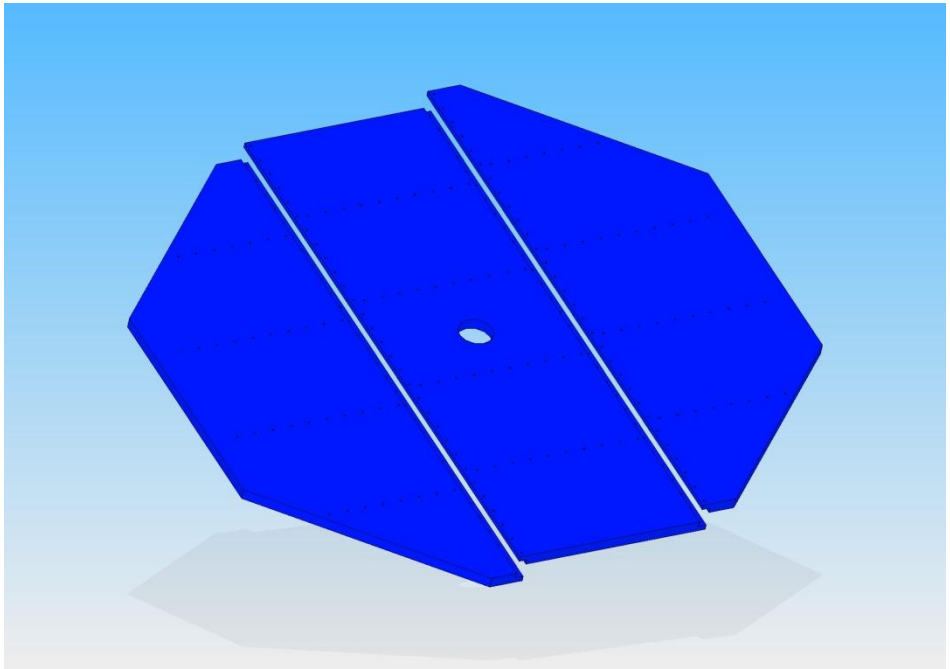

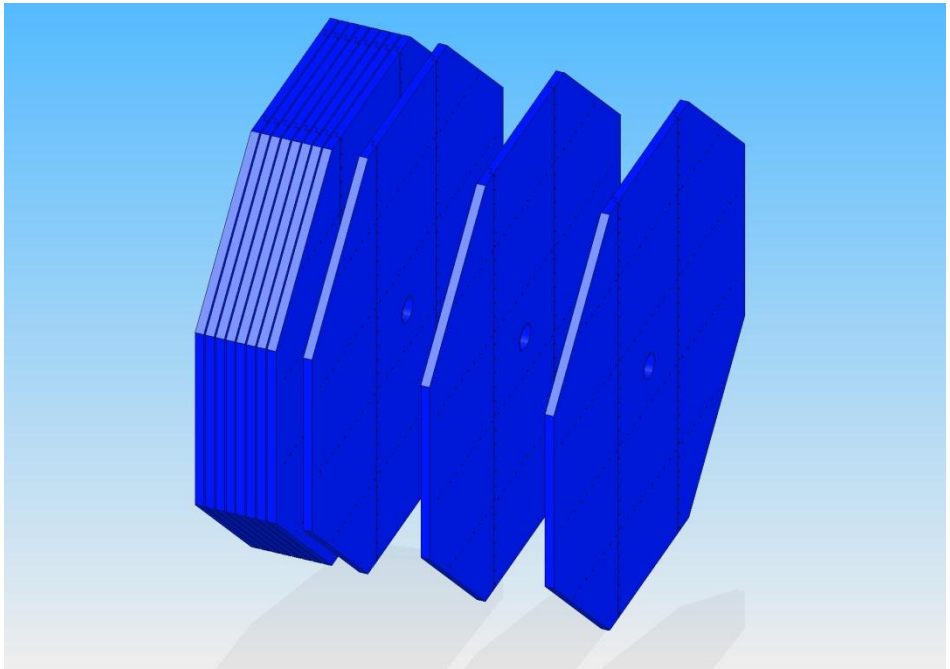

Door Assembly on the platform

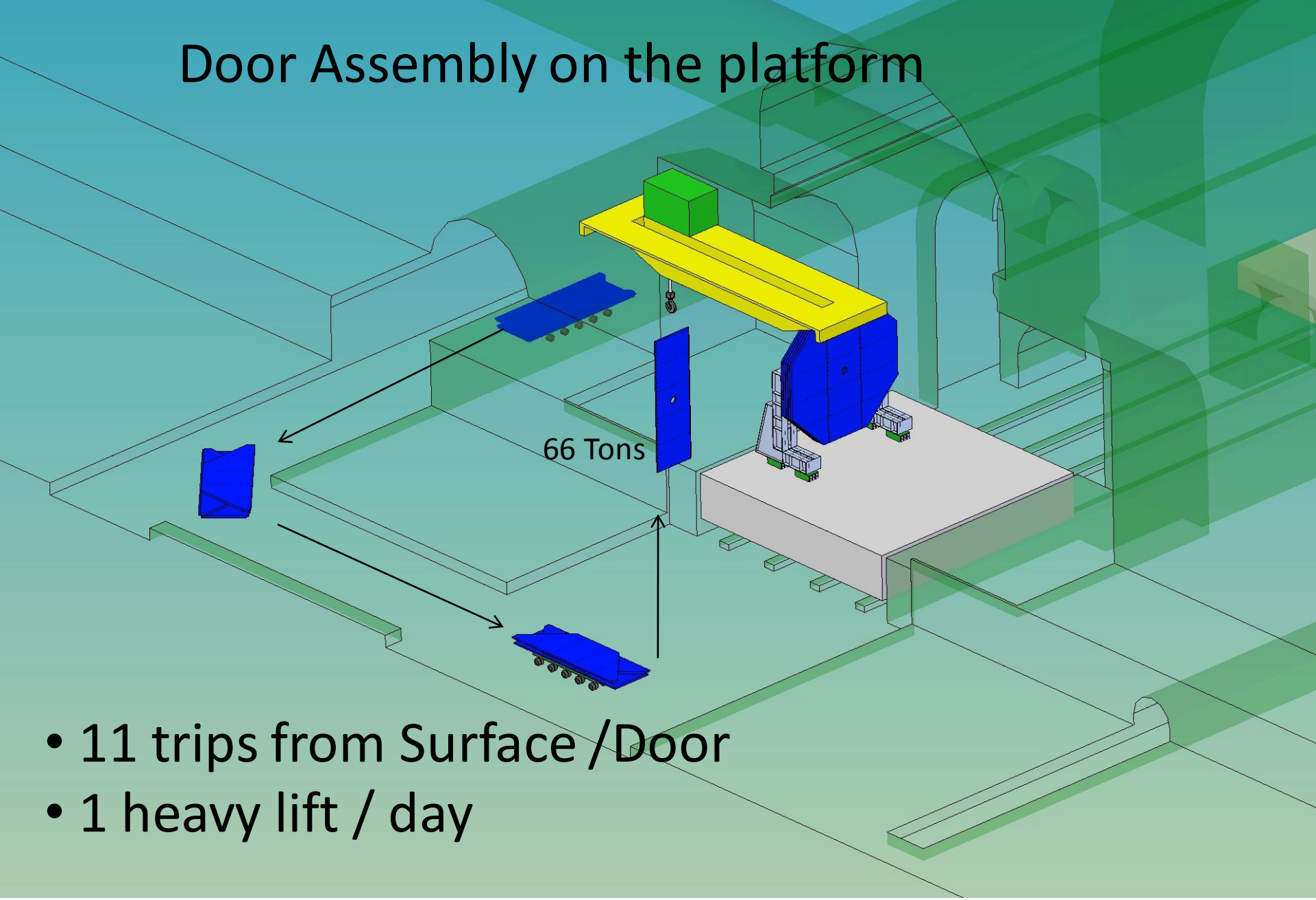

- 11 trips from Surface /Door
- 1 heavy lift / day

Muon Chamber Installation

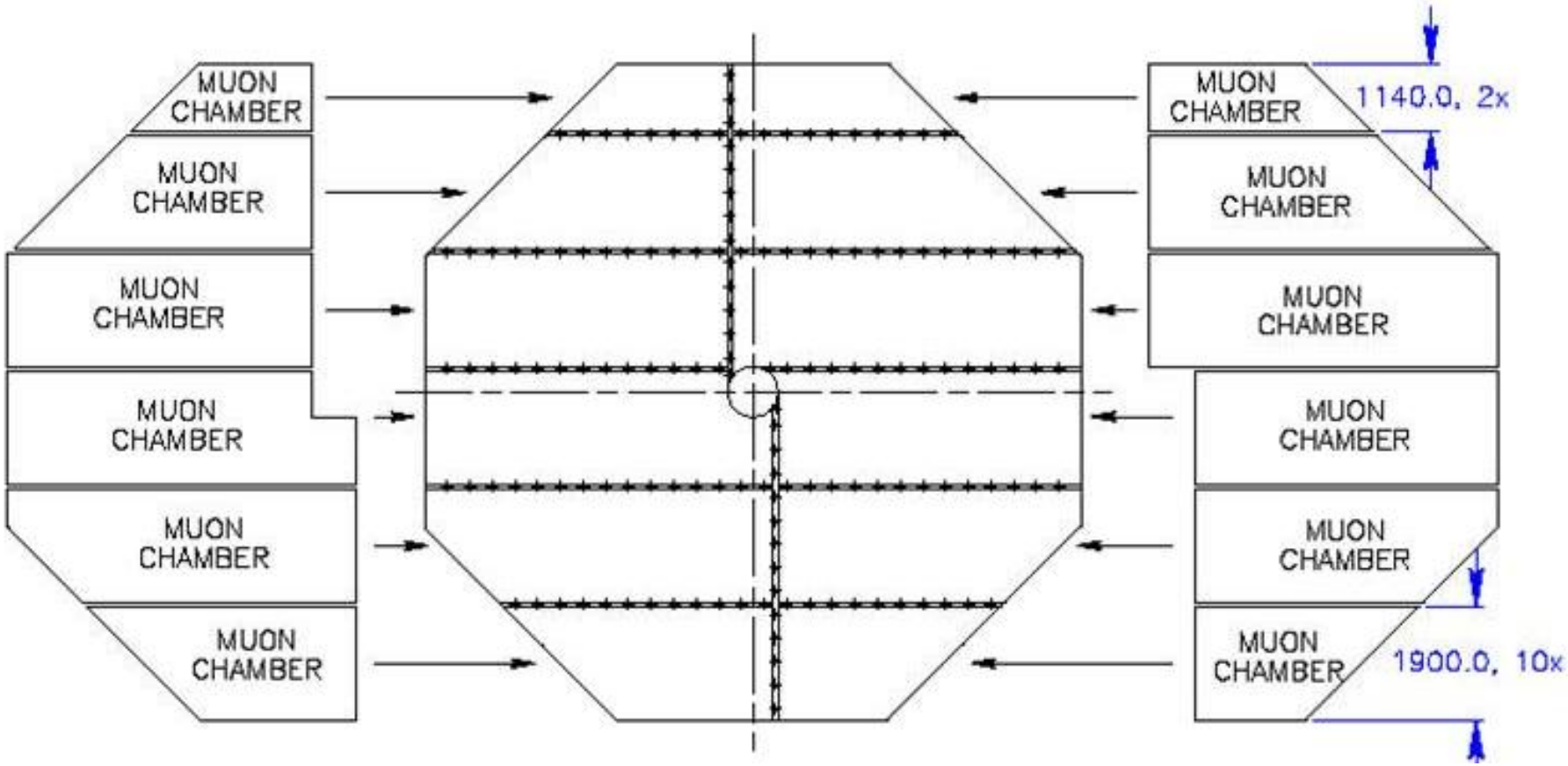

Doors completed – Moved in the alcoves

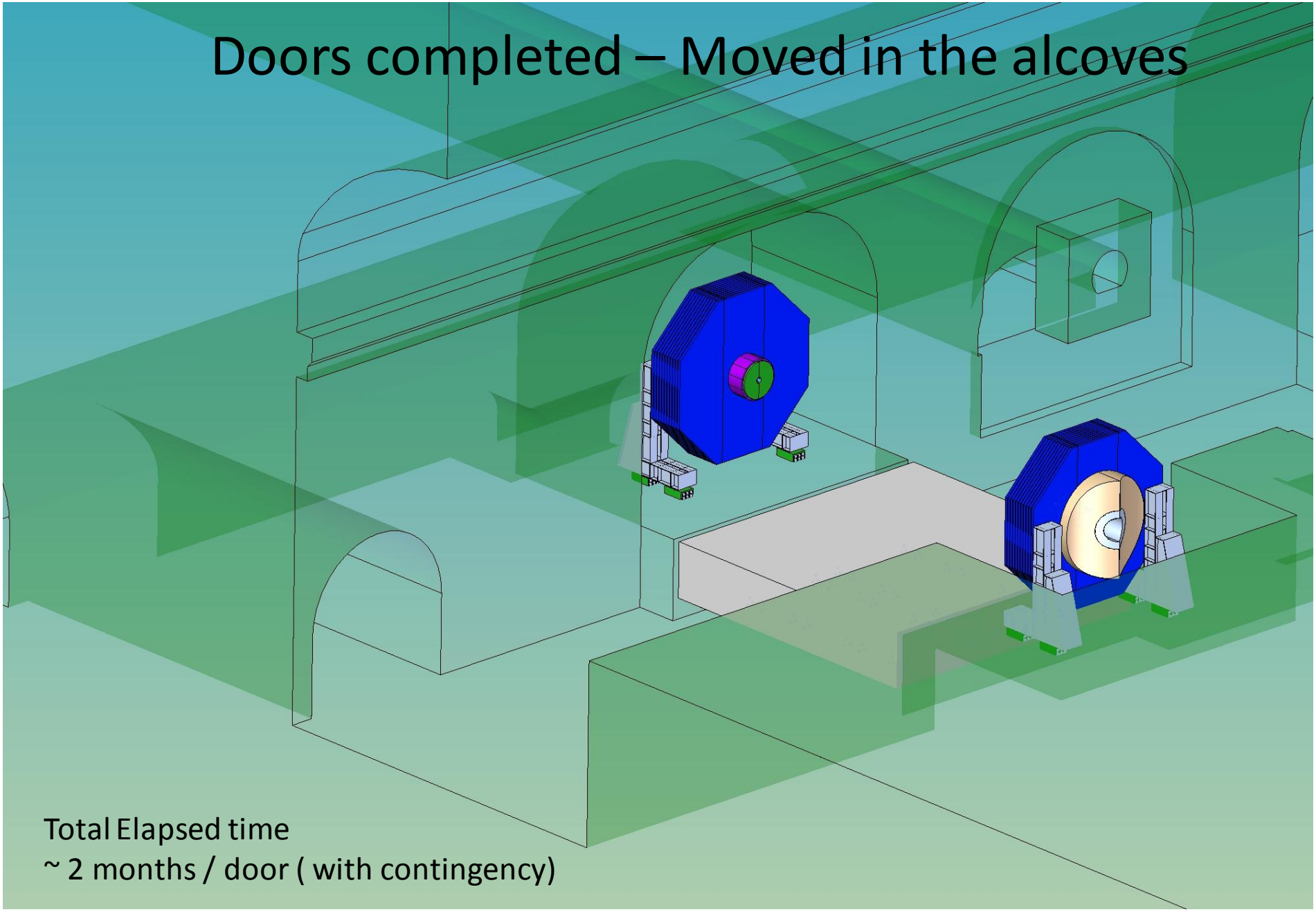

Total Elapsed time
~ 2 months / door (with contingency)

Iron Barrel Yoke layout

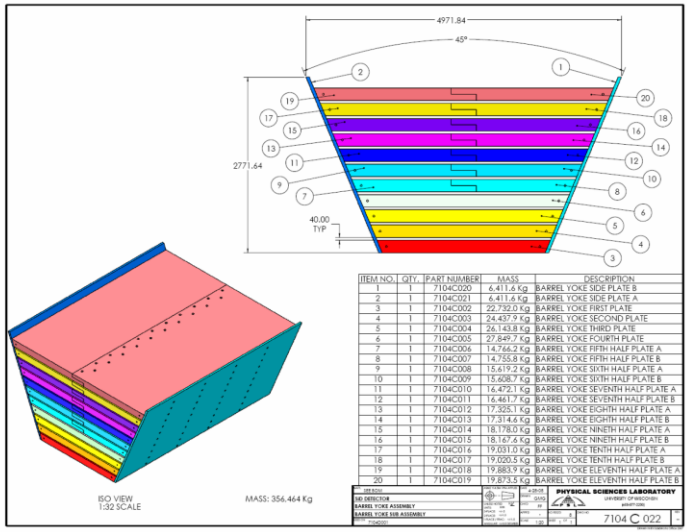

ITEM NO.	QTY.	PART NUMBER	MASS	DESCRIPTION
1	1	7104C020	6,411.6 Kg	BARREL YOKE SIDE PLATE B
2	1	7104C021	6,411.6 Kg	BARREL YOKE SIDE PLATE A
3	1	7104C002	22,732.0 Kg	BARREL YOKE FIRST PLATE
4	1	7104C003	24,437.9 Kg	BARREL YOKE SECOND PLATE
5	1	7104C004	26,143.8 Kg	BARREL YOKE THIRD PLATE
6	1	7104C005	27,849.7 Kg	BARREL YOKE FOURTH PLATE
7	1	7104C006	14,766.2 Kg	BARREL YOKE FIFTH HALF PLATE A
8	1	7104C007	14,755.8 Kg	BARREL YOKE FIFTH HALF PLATE B
9	1	7104C008	15,619.2 Kg	BARREL YOKE SIXTH HALF PLATE A
10	1	7104C009	15,608.7 Kg	BARREL YOKE SIXTH HALF PLATE B
11	1	7104C010	16,472.1 Kg	BARREL YOKE SEVENTH HALF PLATE A
12	1	7104C011	16,461.7 Kg	BARREL YOKE SEVENTH HALF PLATE B
13	1	7104C012	17,325.1 Kg	BARREL YOKE EIGHTH HALF PLATE A
14	1	7104C013	17,314.6 Kg	BARREL YOKE EIGHTH HALF PLATE B
15	1	7104C014	18,178.0 Kg	BARREL YOKE NINETH HALF PLATE A
16	1	7104C015	18,167.6 Kg	BARREL YOKE NINETH HALF PLATE B
17	1	7104C016	19,031.0 Kg	BARREL YOKE TENTH HALF PLATE A
18	1	7104C017	19,020.5 Kg	BARREL YOKE TENTH HALF PLATE B
19	1	7104C018	19,883.9 Kg	BARREL YOKE ELEVENTH HALF PLATE A
20	1	7104C019	19,873.5 Kg	BARREL YOKE ELEVENTH HALF PLATE B

Bolted assembly, 144 plates 200 mm thick, 40mm gap

Opportunity to make blank assembly at the factory before shipping

Preliminary Contacts with Kawasaki Heavy Industries

- Plate thickness tolerance for each: 0.1mm
- Plate flatness: 4mm (in a plate)
- Fabrication (assembling & welding) tolerance: 2mm
- Full trial assembly: capable (but need to study)

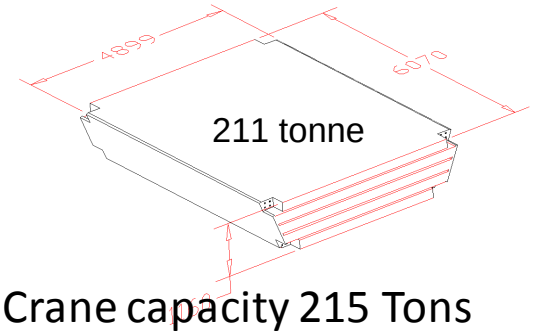

Max. Crane capacity 215 Tons

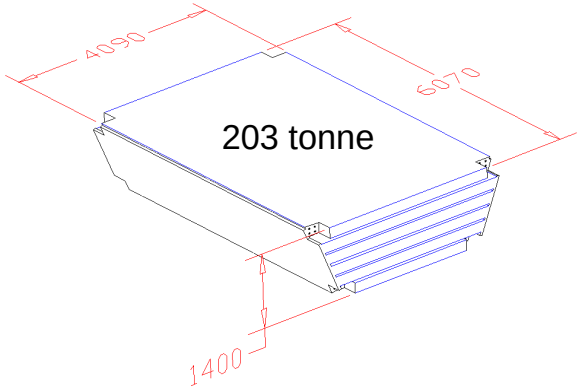

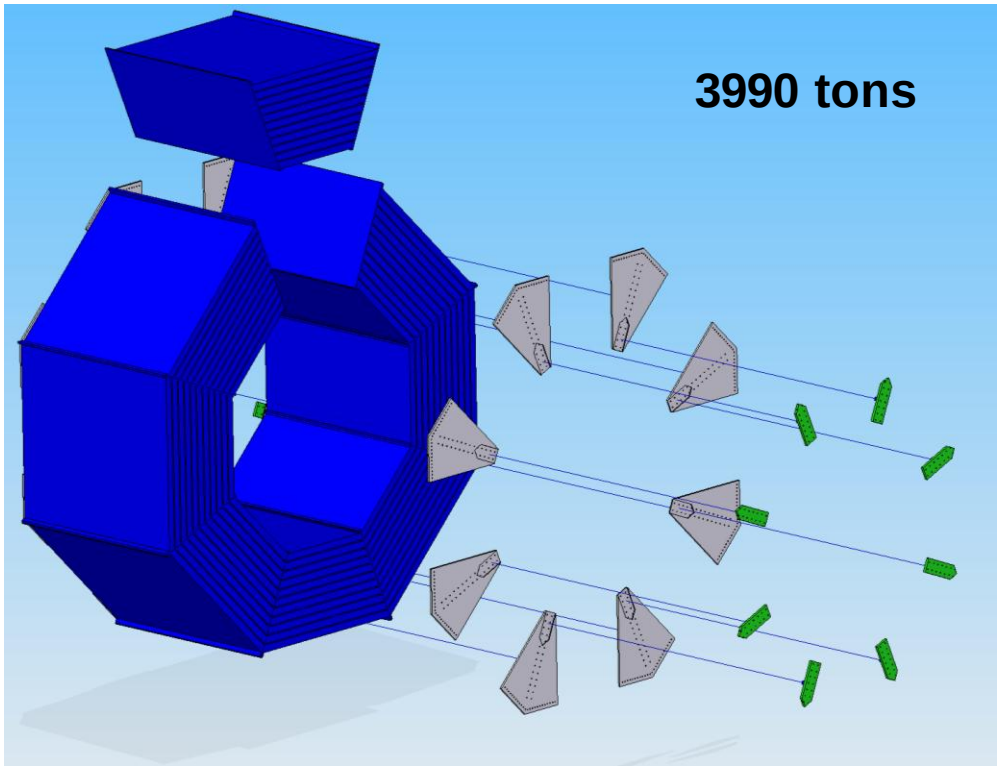

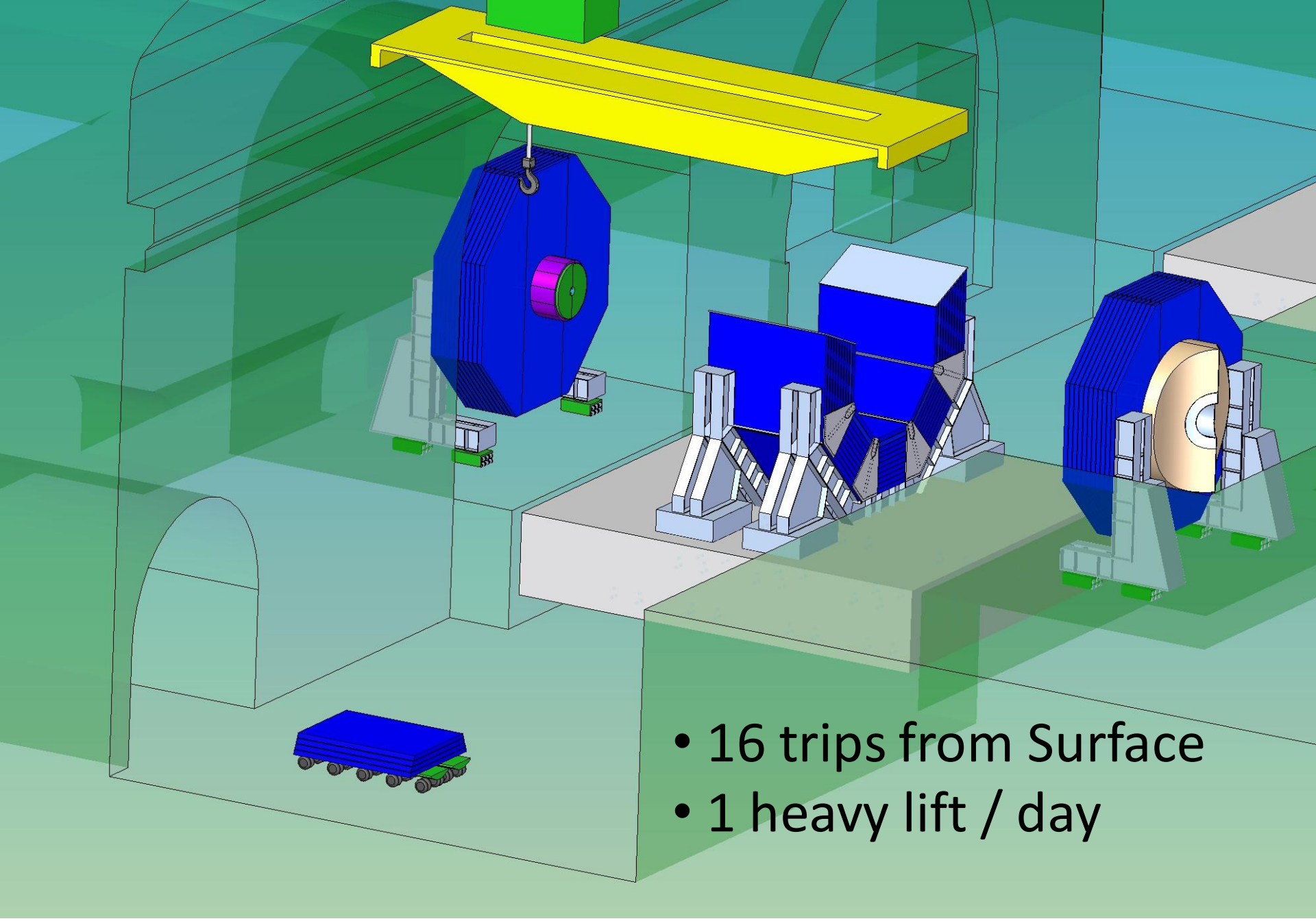

- 16 trips from Surface
- 1 heavy lift / day

1. Assembly on Site (surface)
2. Test with low current

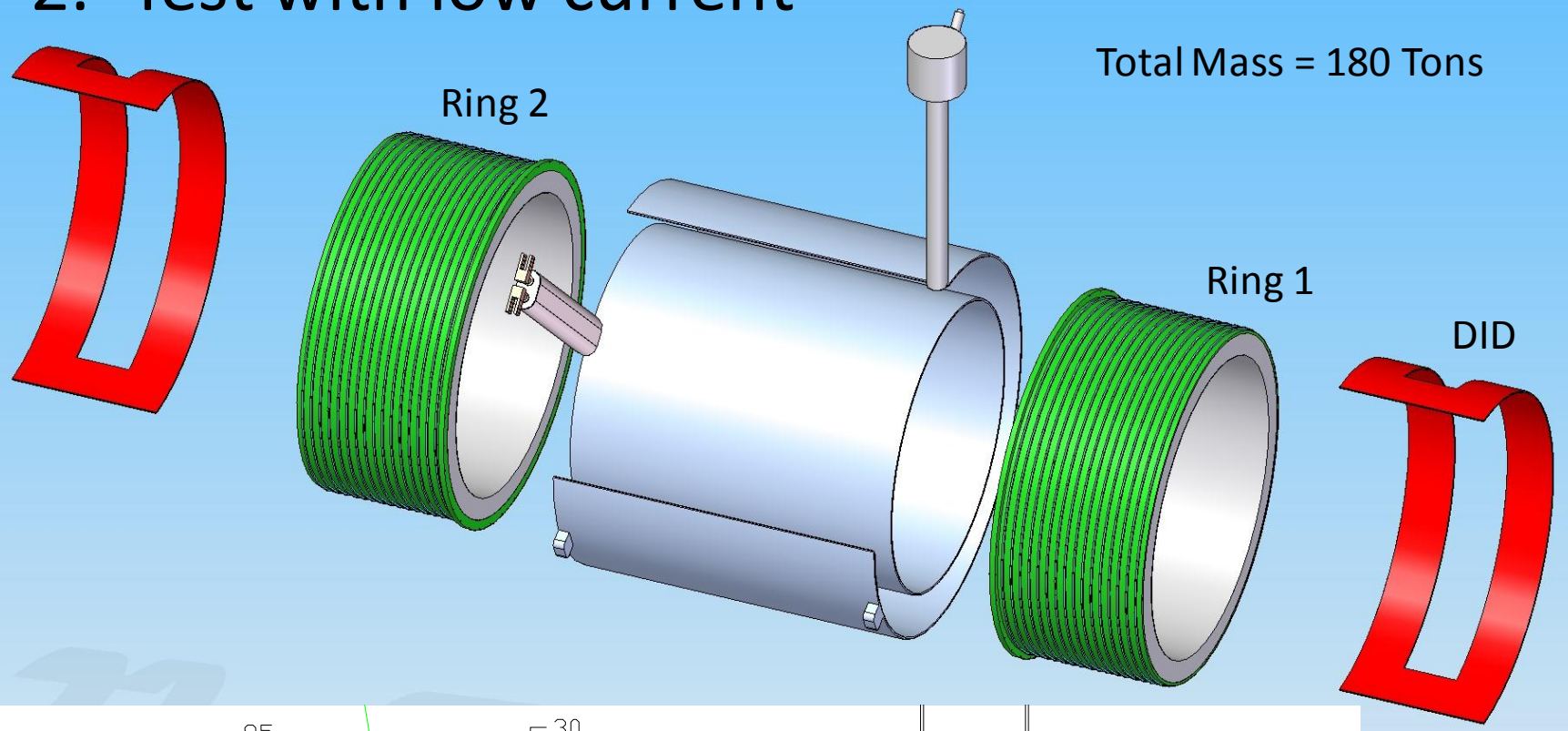

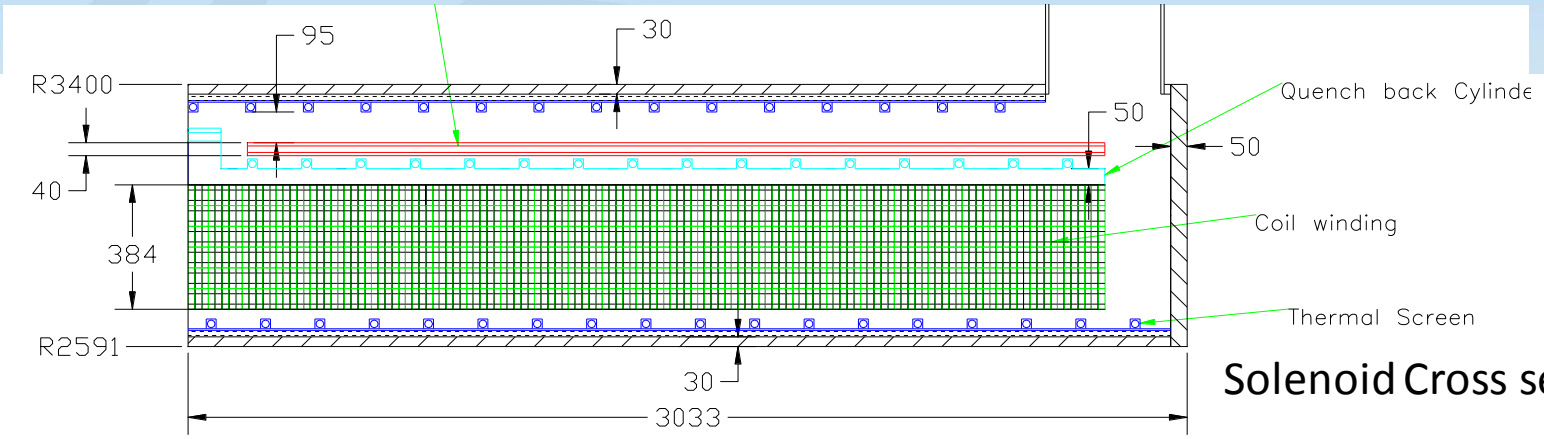

Solenoid Cross section

Access Tunnel, Coil

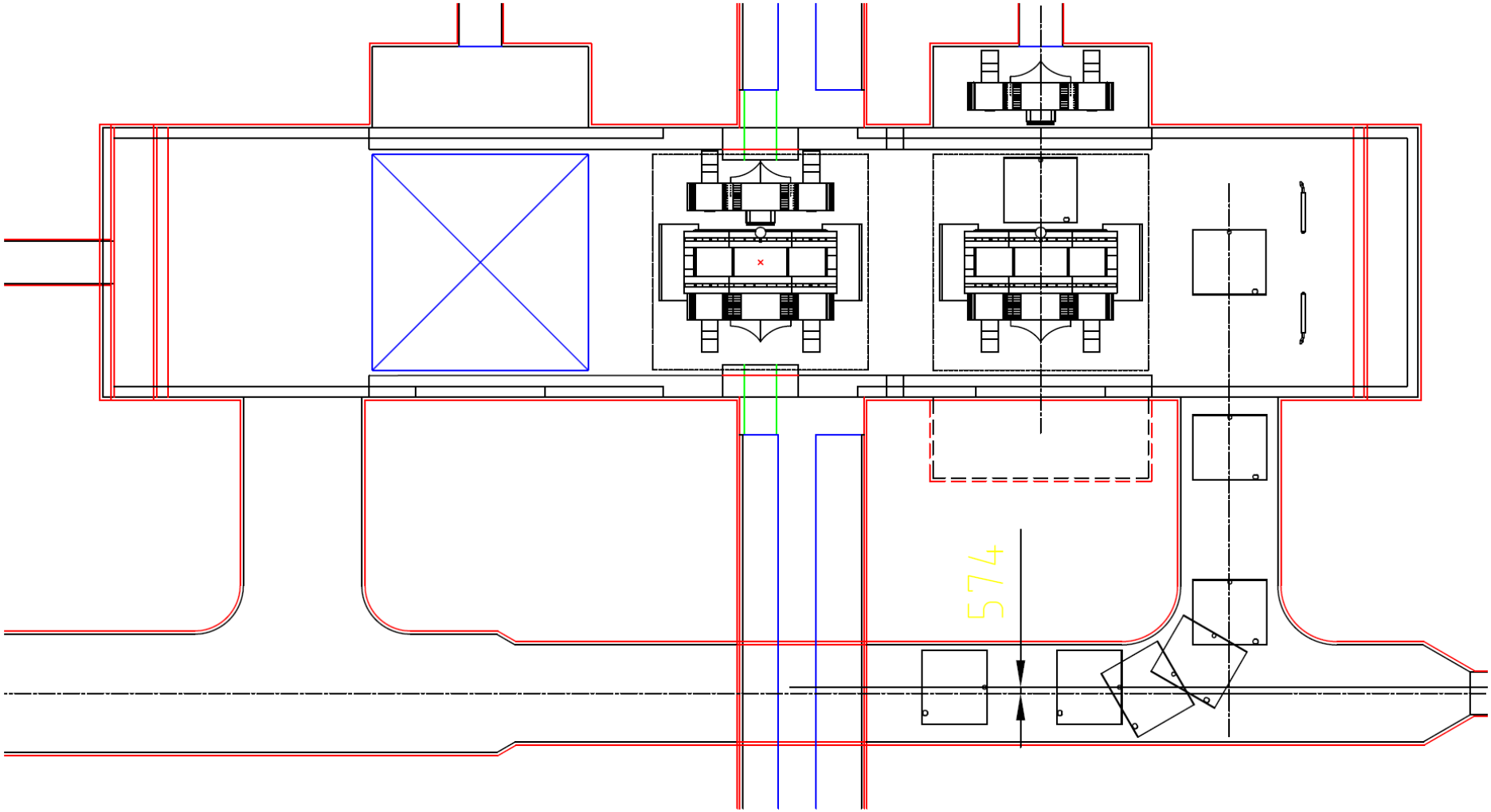

Solenoid on truck,

Solenoid Installation path (view from the top)

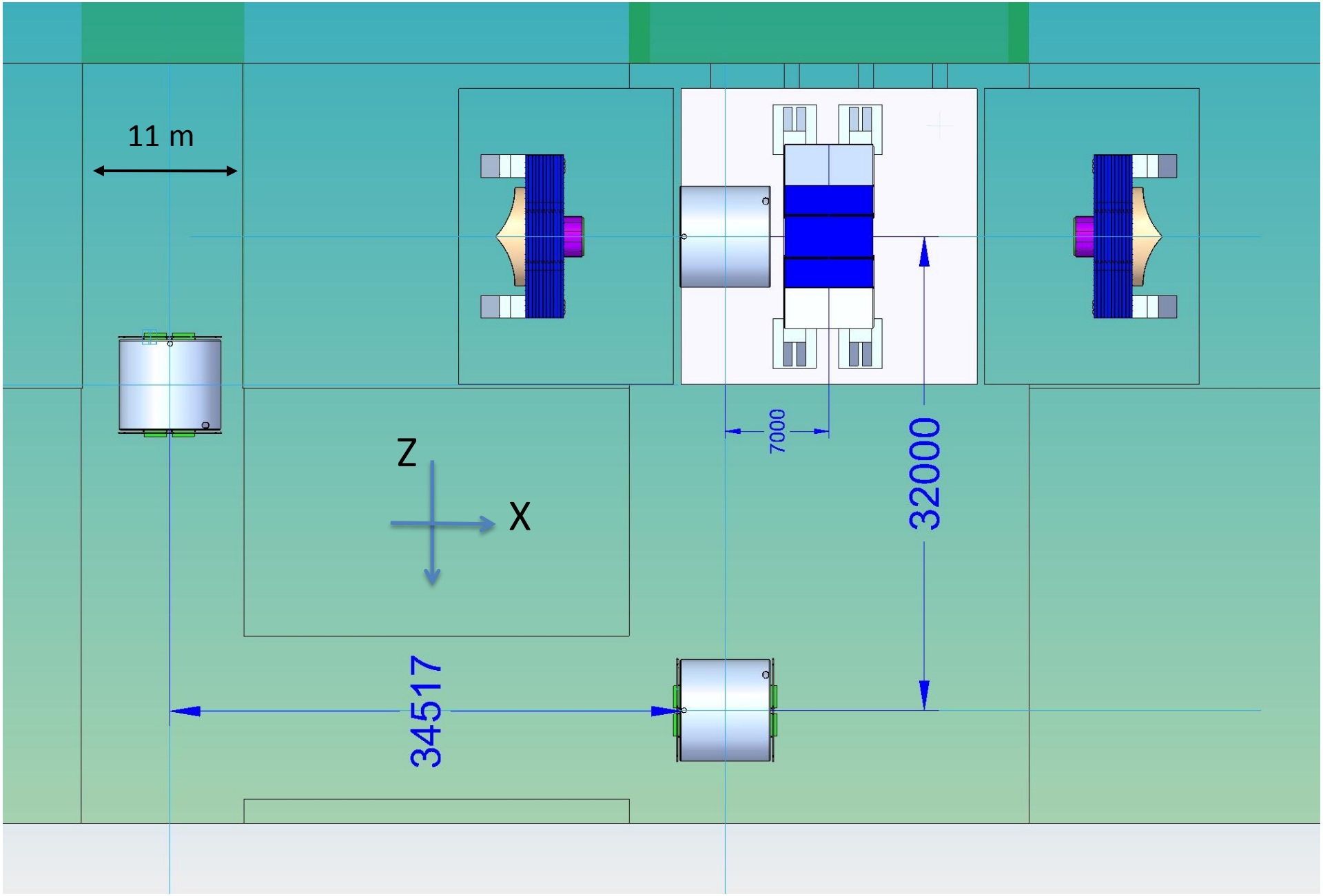

Solenoid Installation

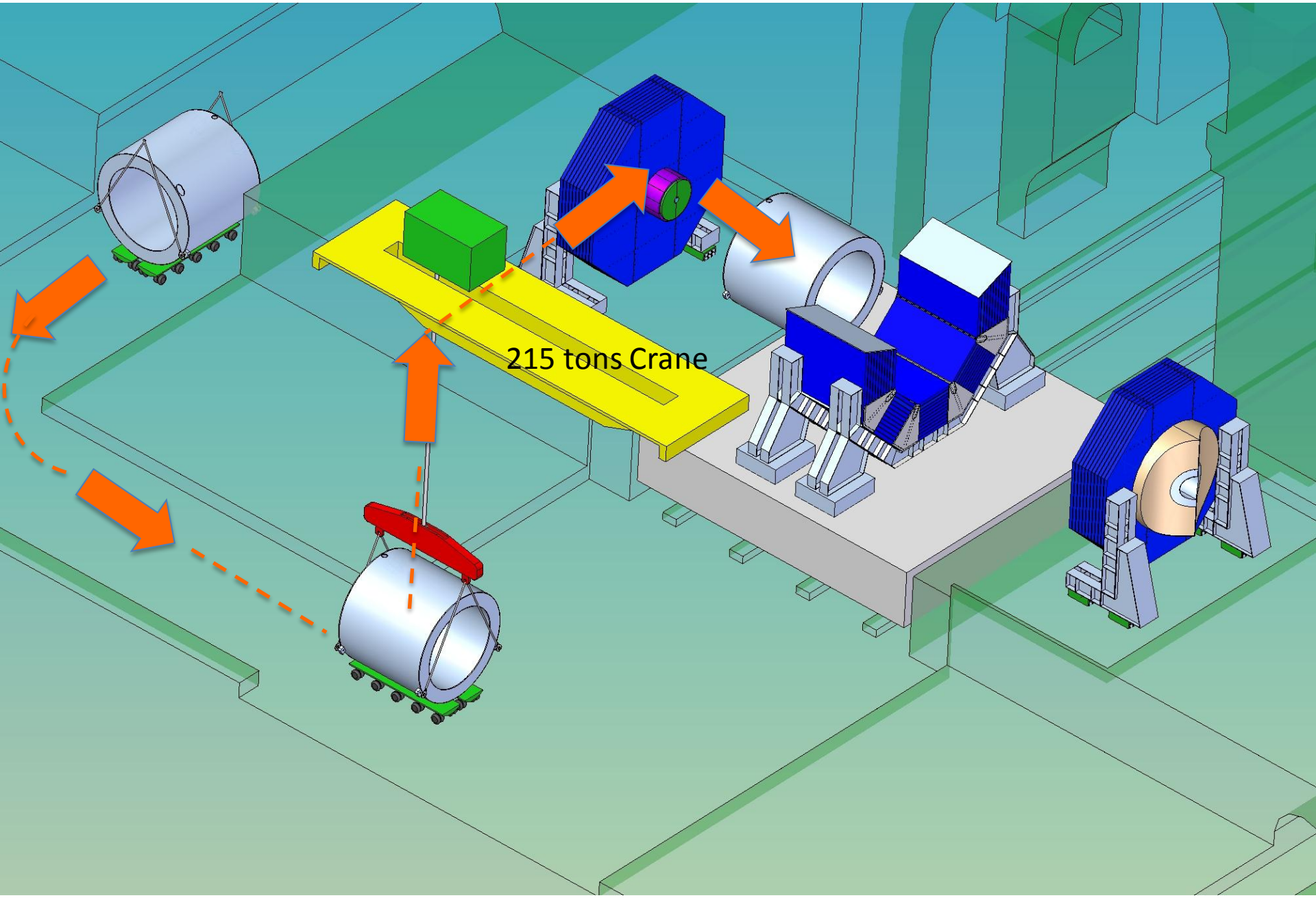

HCAL Barrel, 12 wedges x 38 tons

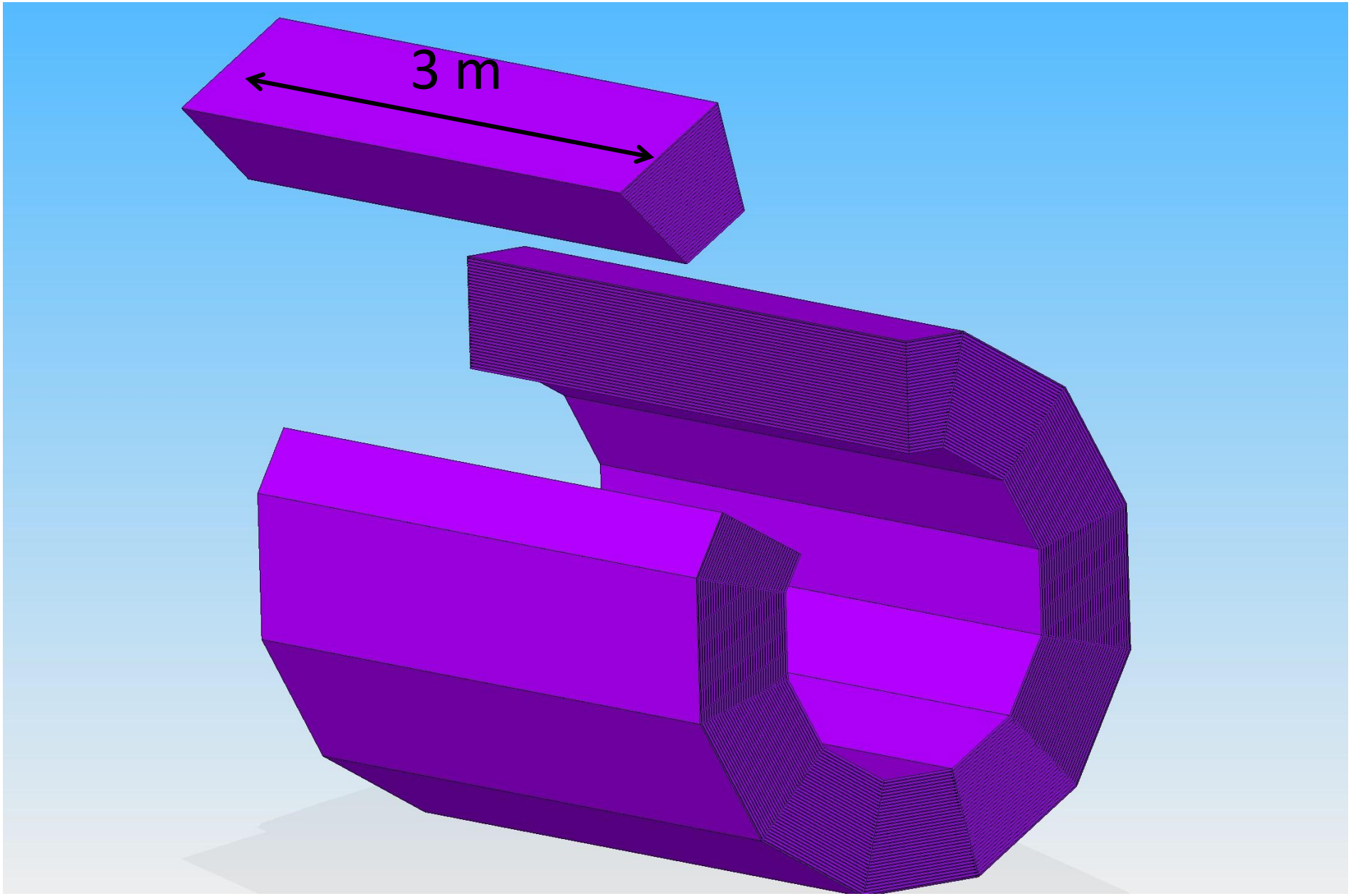

HCAL Barrel Assembly

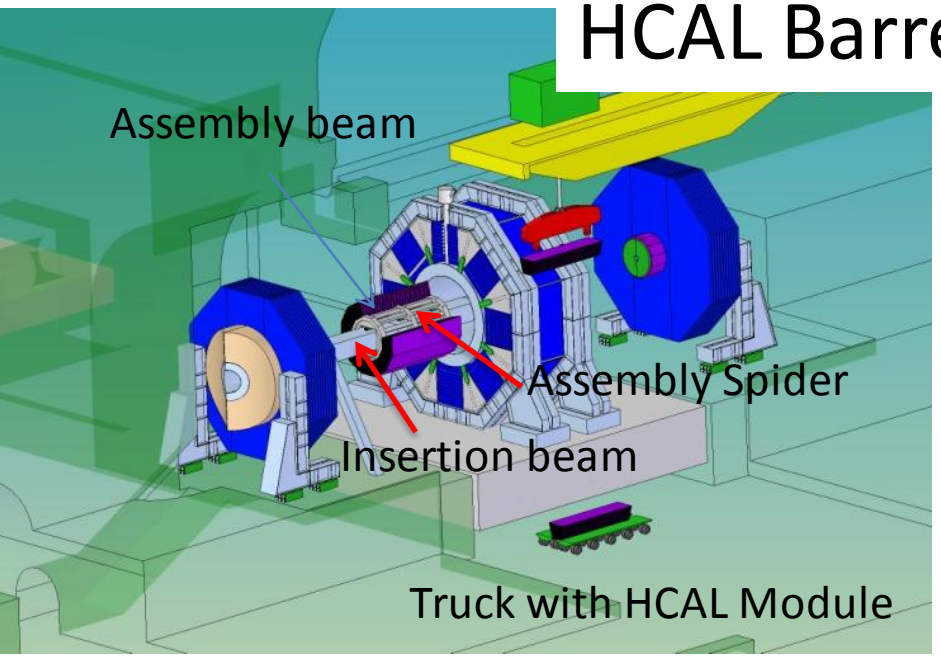

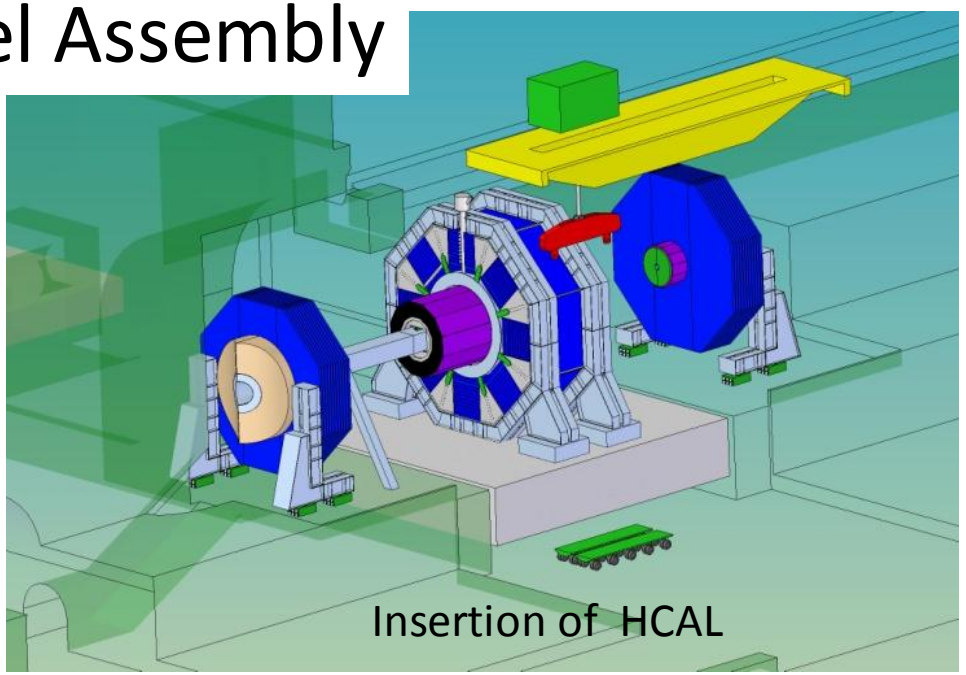

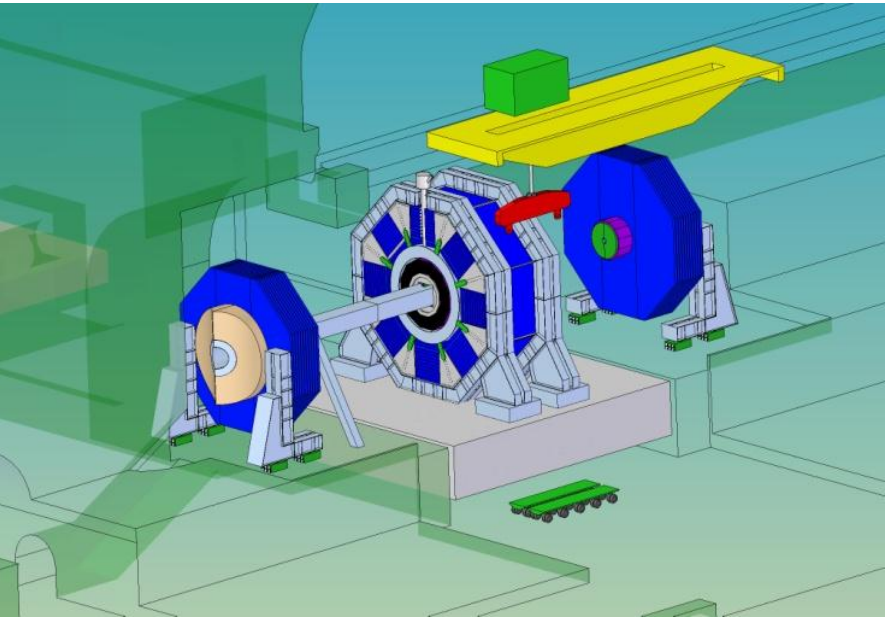

SLD, Liquid Argon Calorimeter
Assembly Beam

QD0 Assembly

It can be done in the alcove with the door moved on the platform
Need of a small crane ~3-5 tons in the alcove

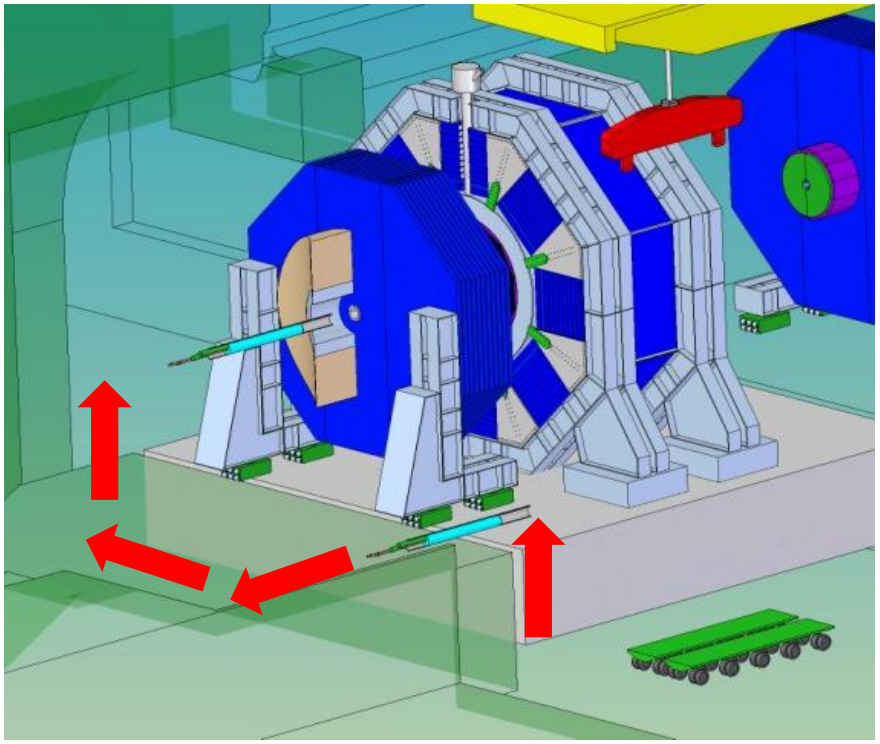

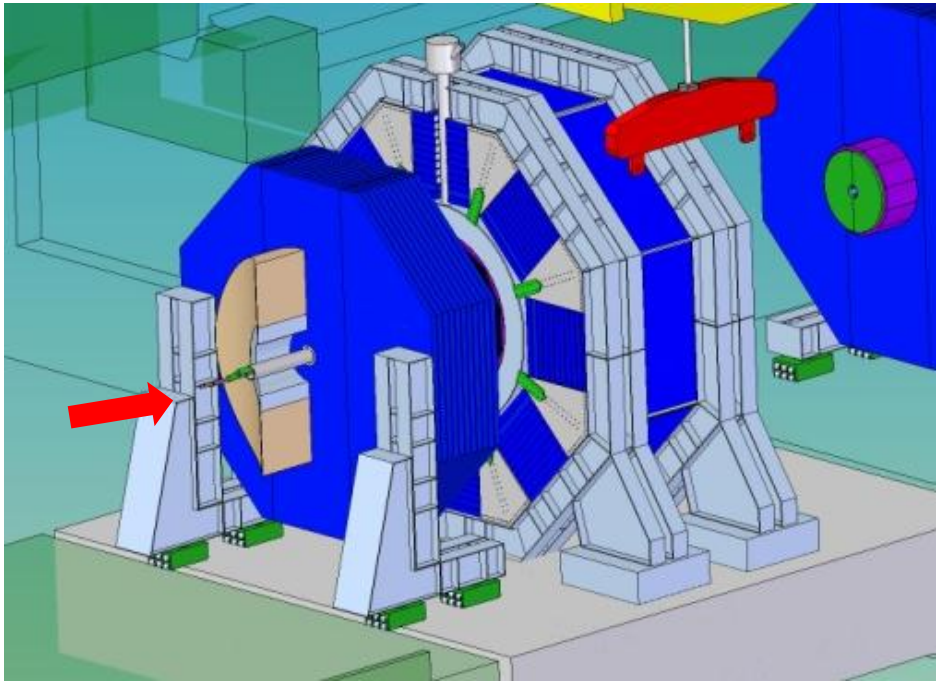

- Alcoves only used for cabling and Door maintenance
- Only Low capacity cranes (monorail ~2-5 tons)

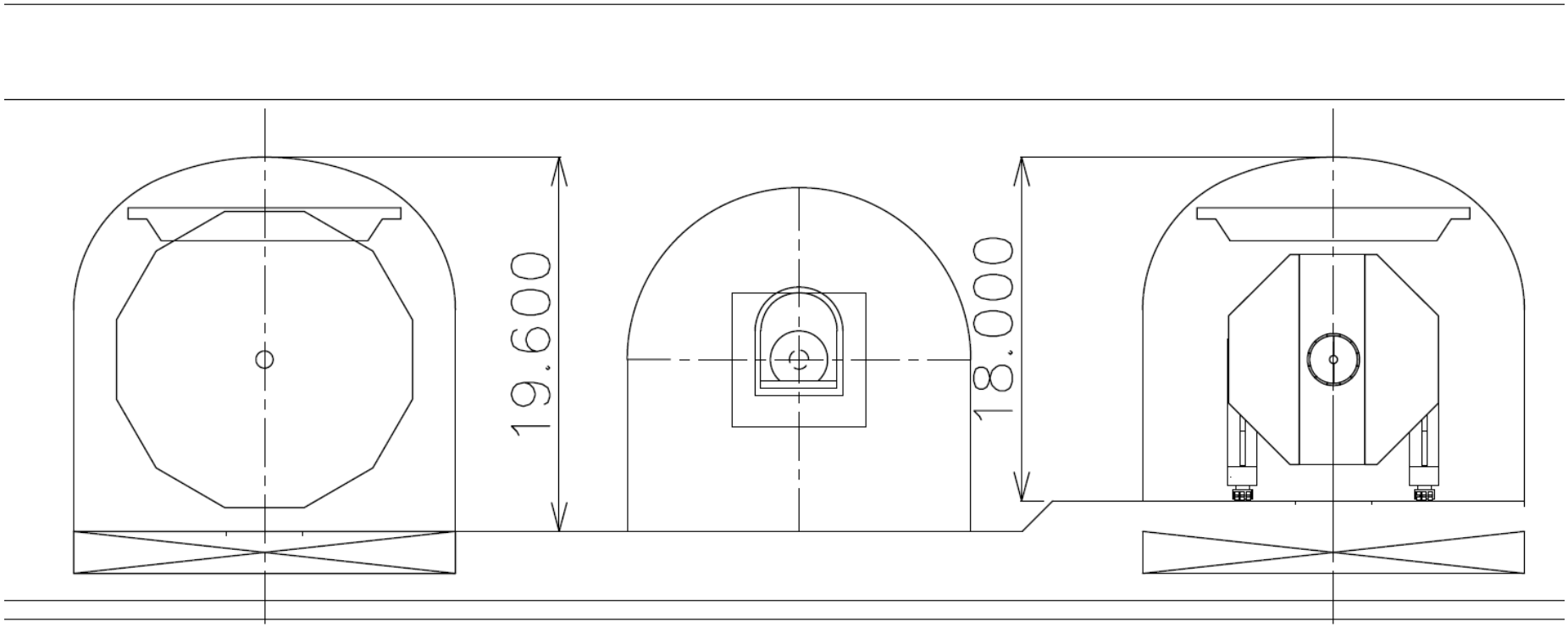

ILD

SID

Possible Optimizations

- Length reduction of the Loading Area
- Total length 2 x 56 m vs. 2 x 72 m
- Space around IP as temporary storage for tooling

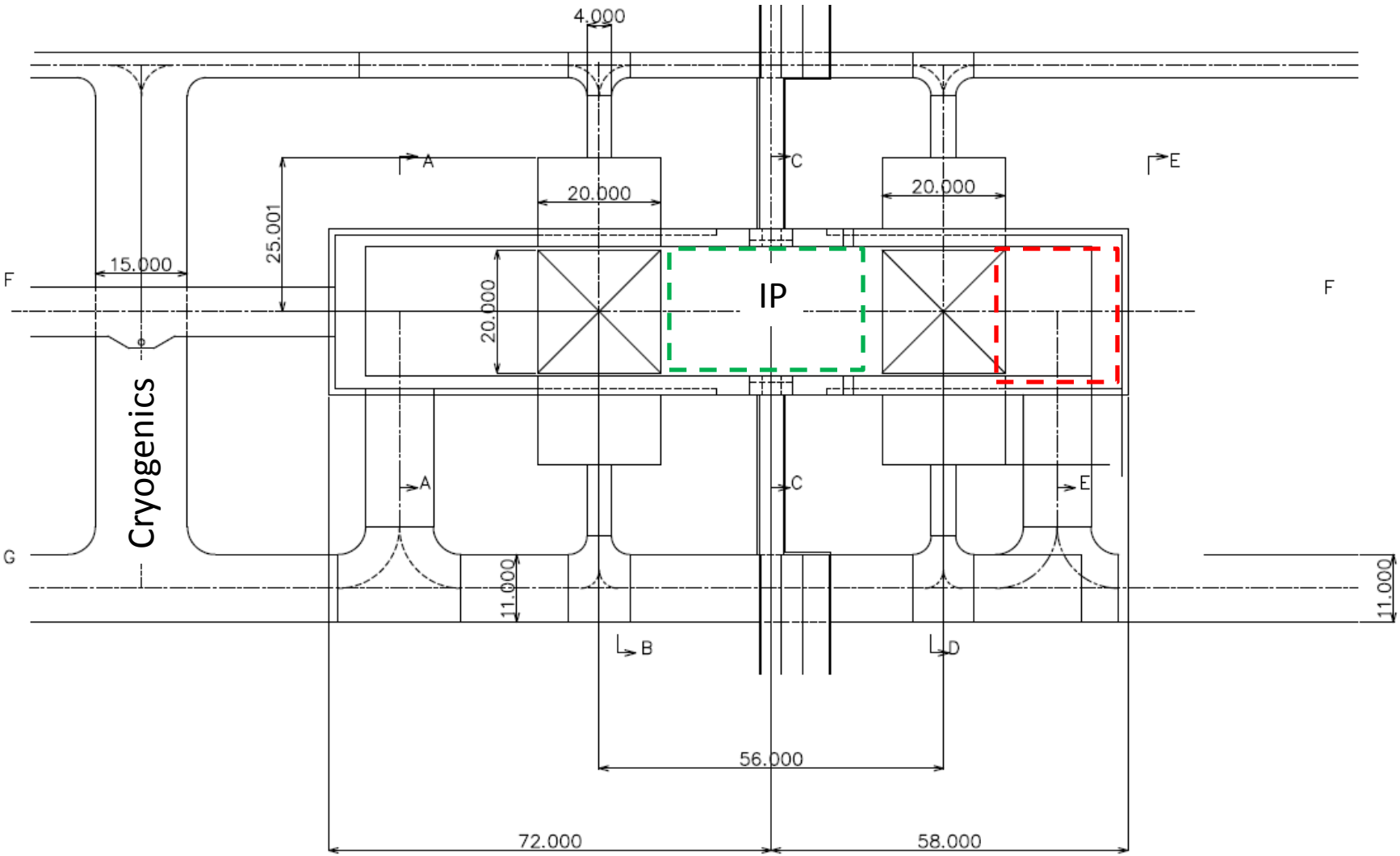

Baseline Reduced

Cryogenics layout

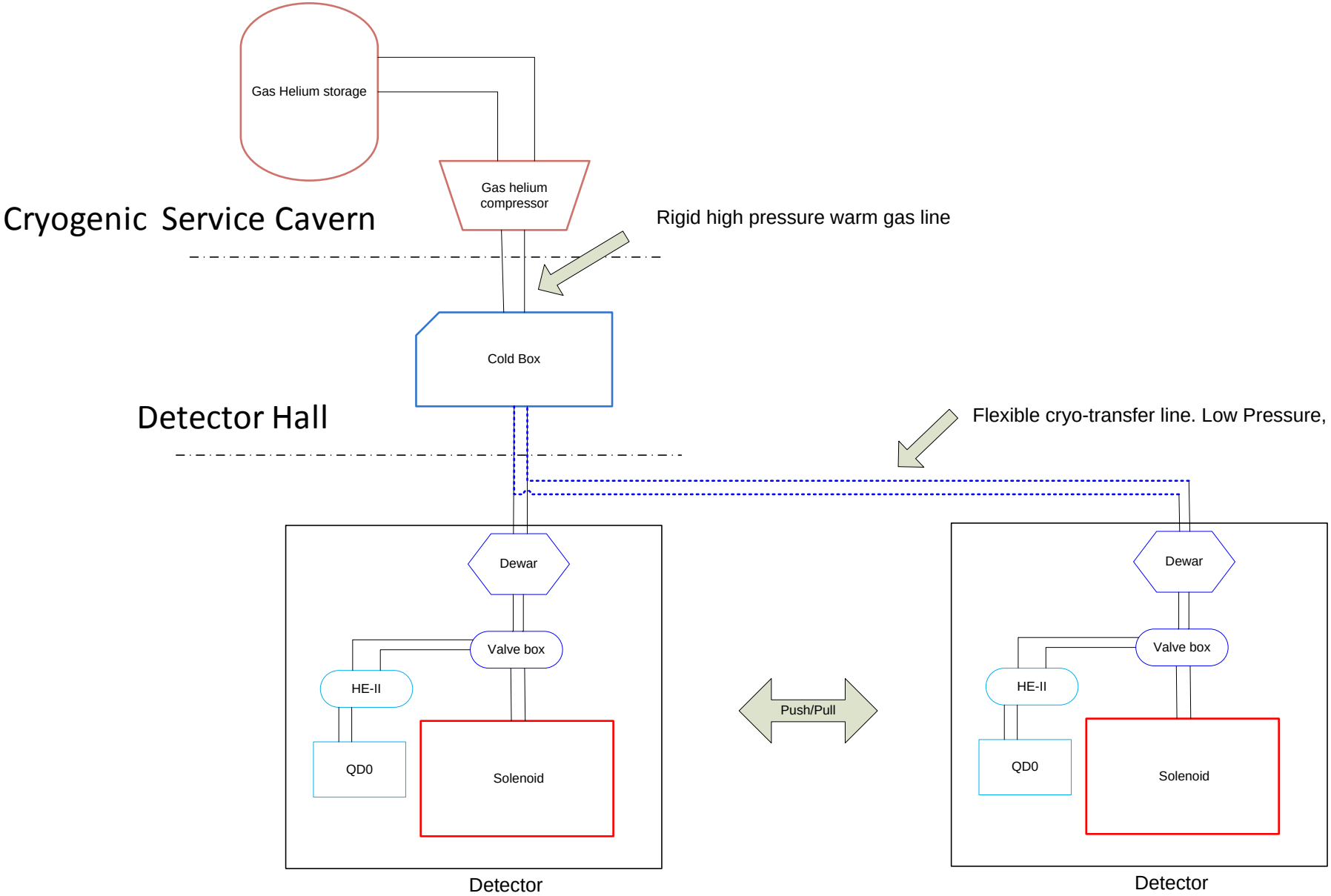

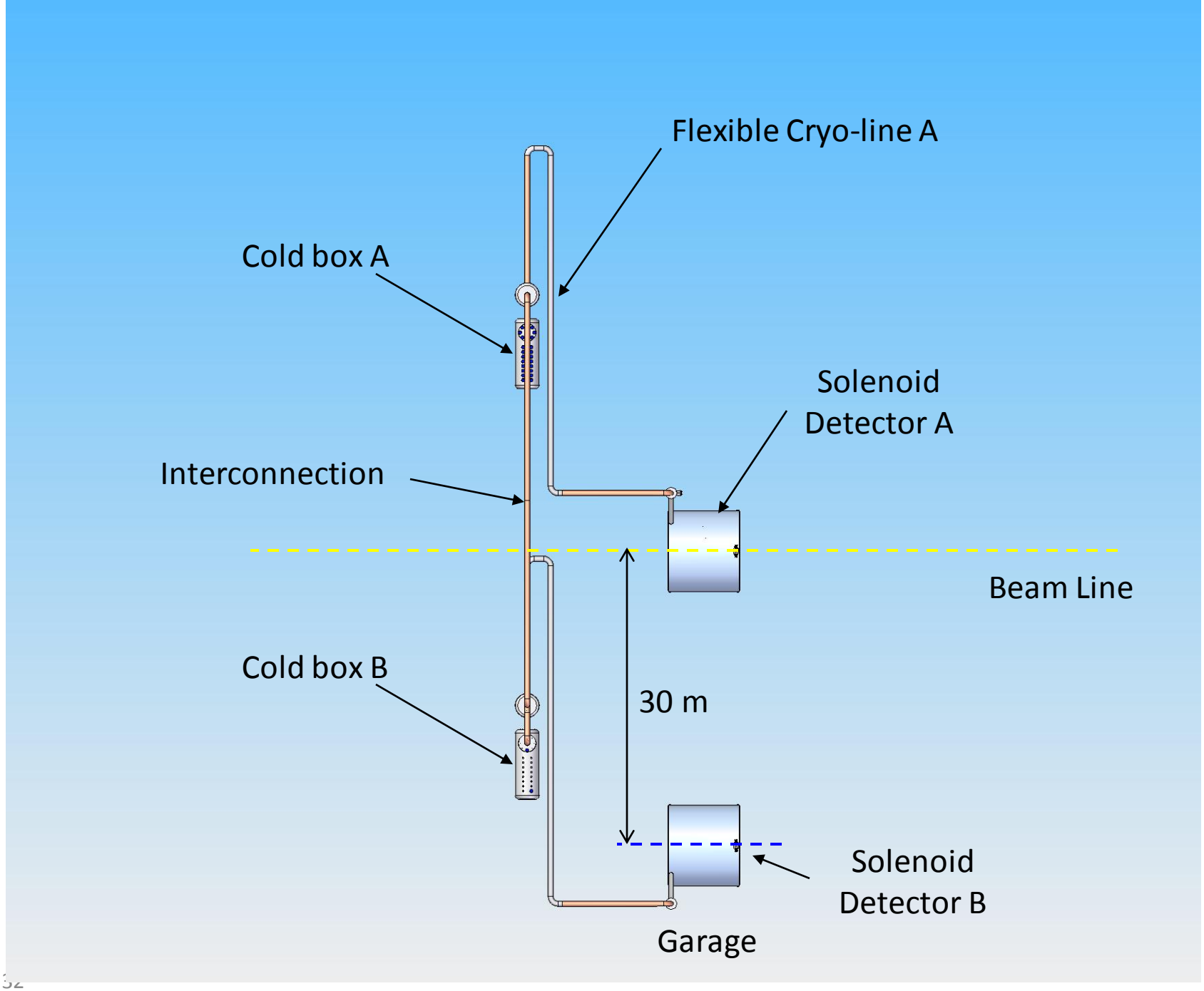
Flexible Cryo-line A
Cold box A
Solenoid
Detector A
Interconnection
Beam Line
Cold box B
30 m
Solenoid
Detector B
Garage

Surface Area, Very preliminary study

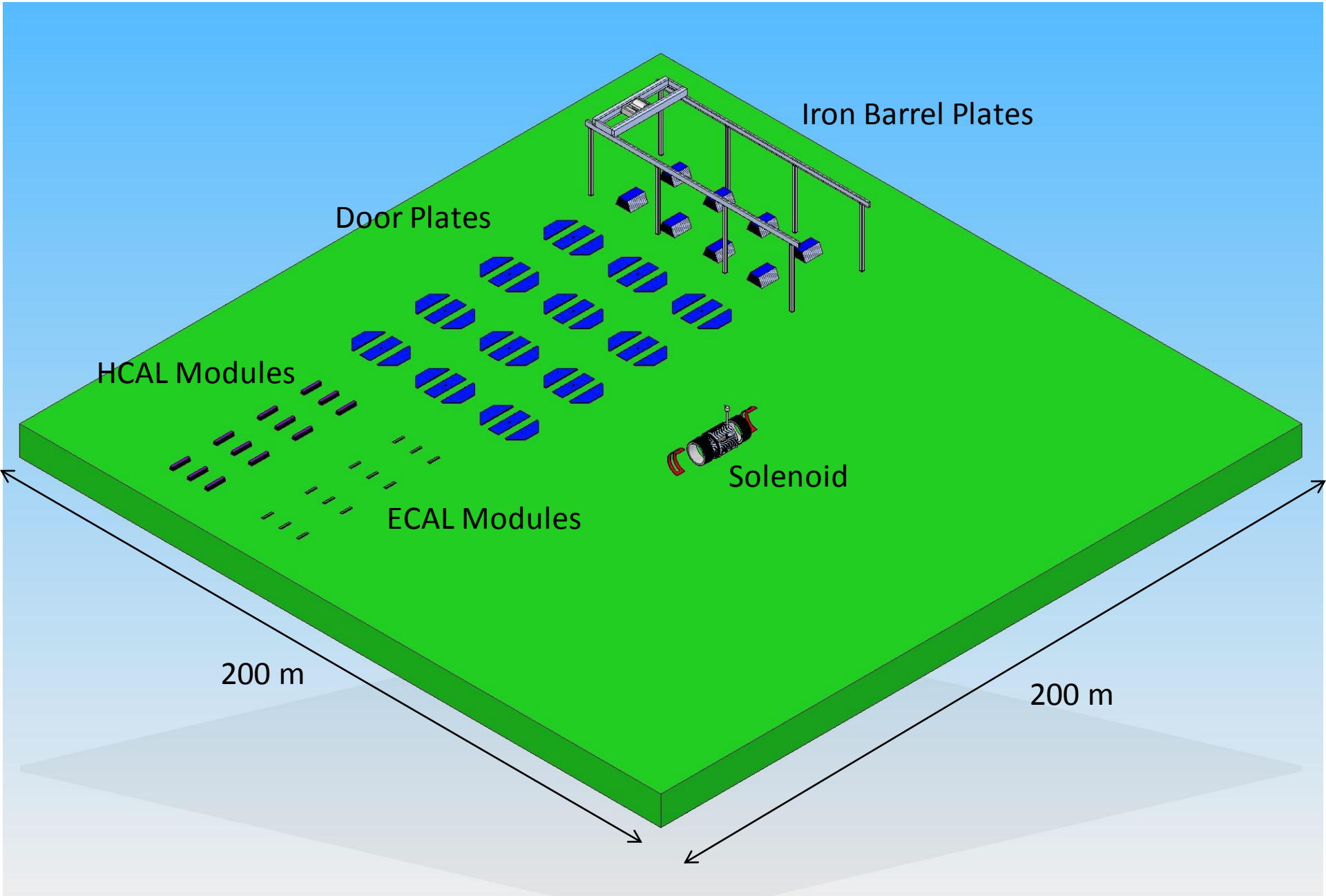

Summary

SID has developed assembly scenarios for both the Vertical and Horizontal access shaft.

The Detector Hall with vertical shafts has been redesigned and optimized for the push-pull, in a common effort with ILD.

The Japanese Mountain site with horizontal shafts is preferred by SID, being closer to the original assembly procedure considered for the design of the detector.

With the present baseline we believe that there is still a margin to optimize cost and procedure.

More work is needed to define the layout of the cryogenic distribution and services

The logistic and procedures of the site on surface for the preassembly of the detector is at an early stage.

Spare Sides

Cryogenics system design for push-pull

- Stationary cold box with flexible cryo-transfer line
- Minimize risks vs. a moving cold box with high pressure He flexible line
- Cold boxes interconnection with redundancy feature for temporary unavailability

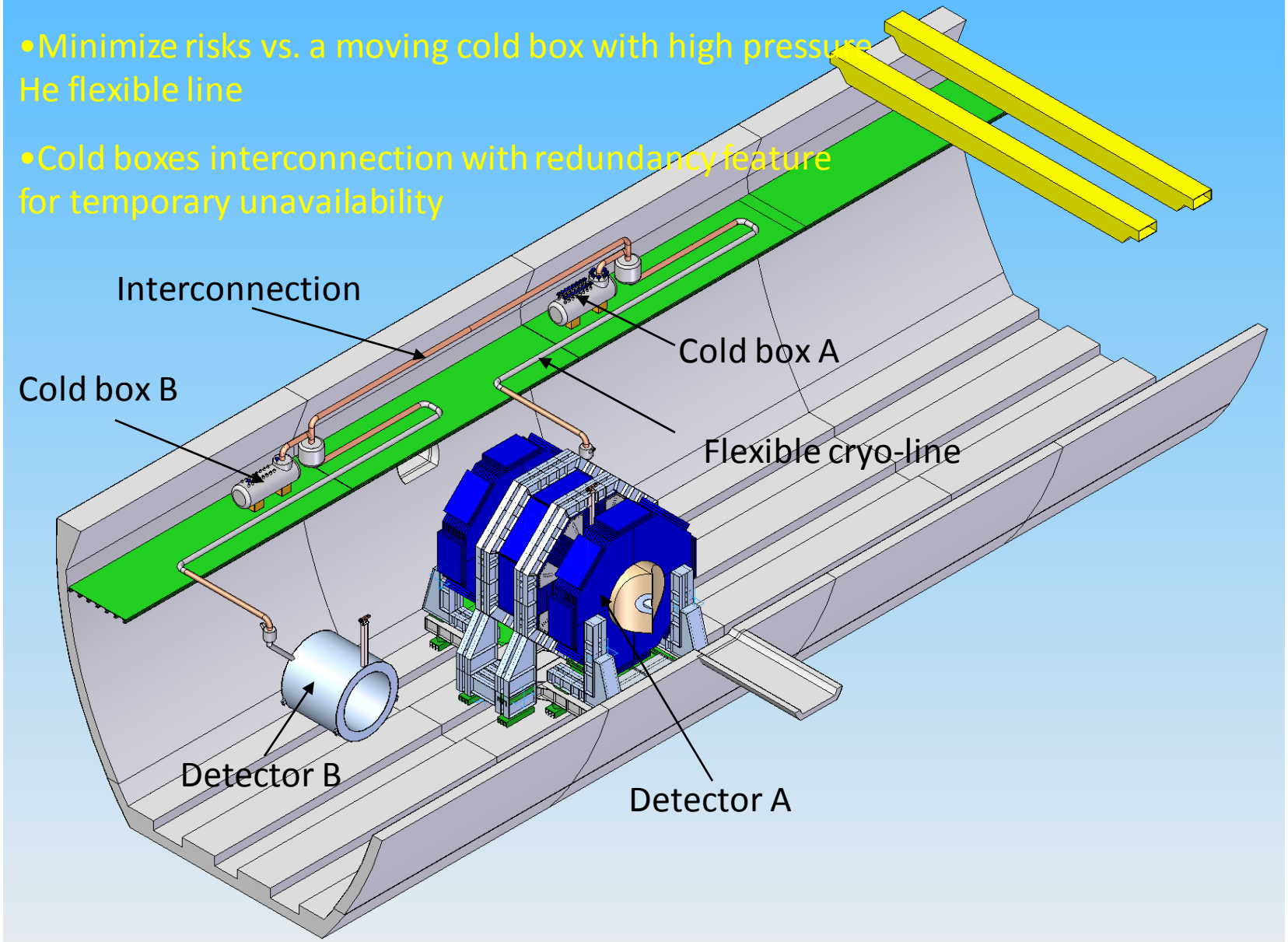

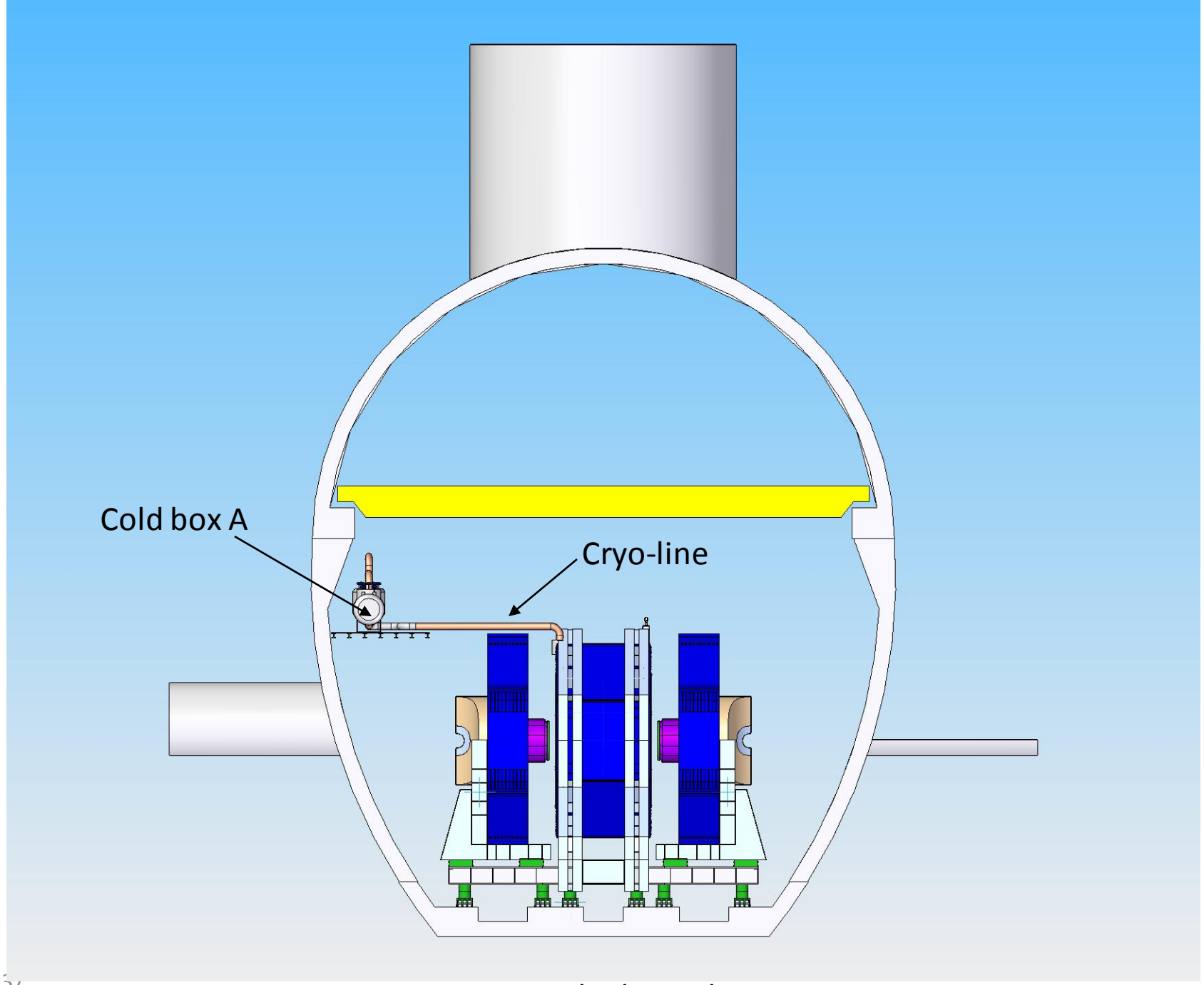

Detector open on the beam line

Rotating Pacmen

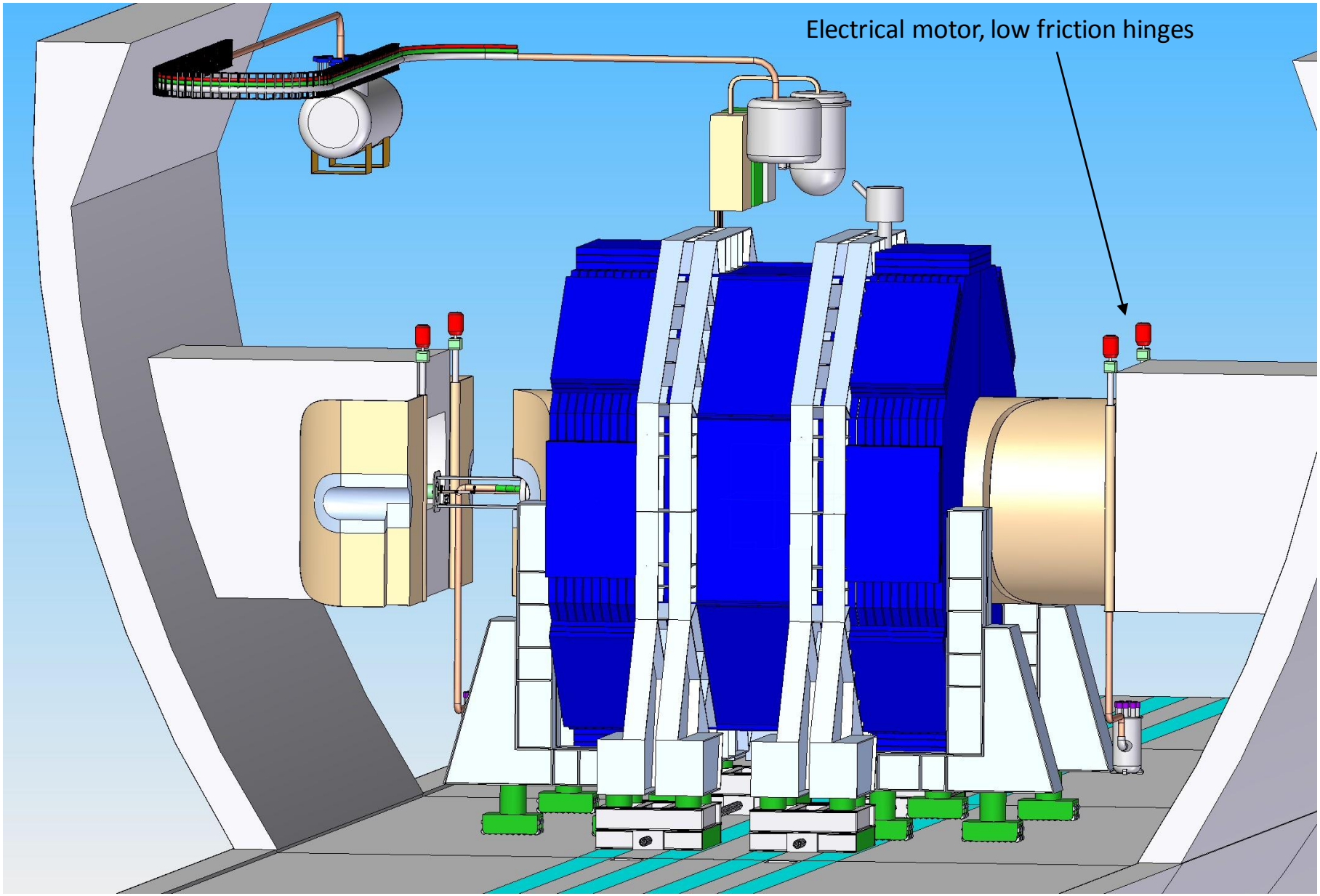

Detector opening on the beam

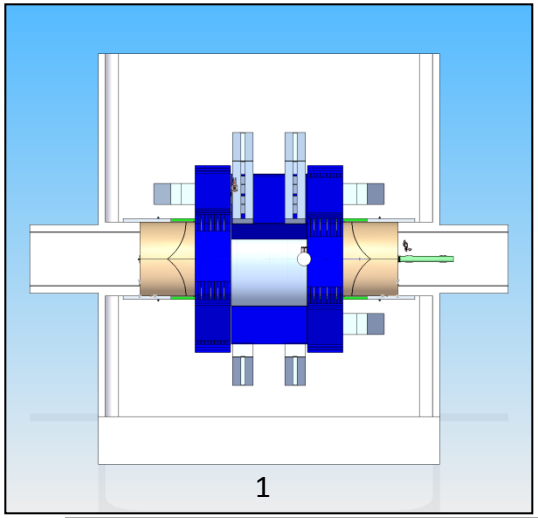

1

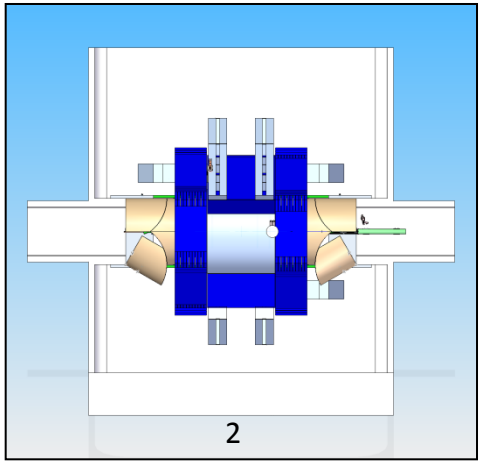

2

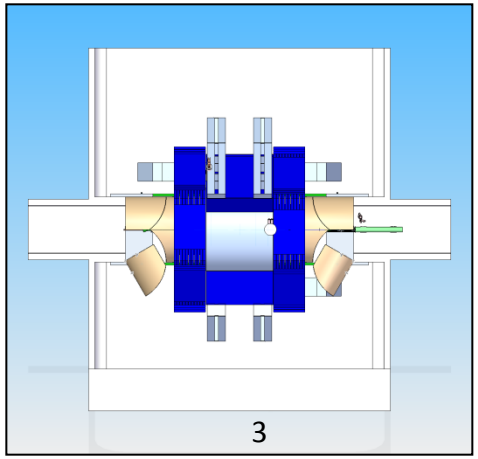

3

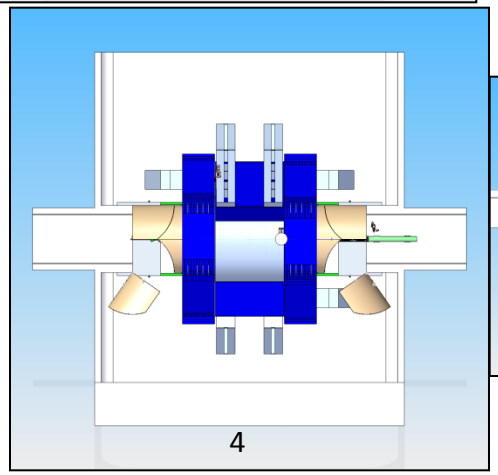

4

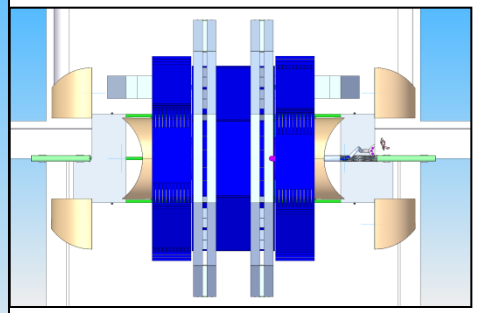

5

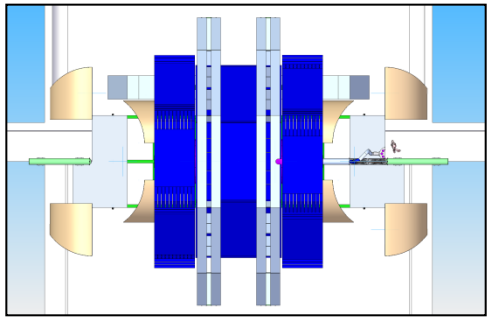

6

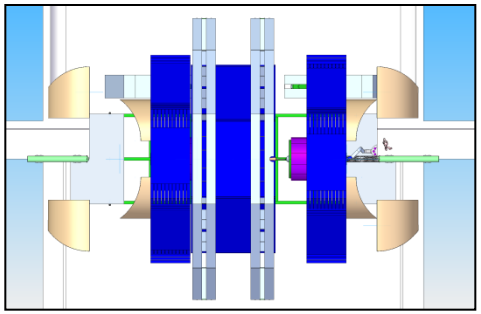

7

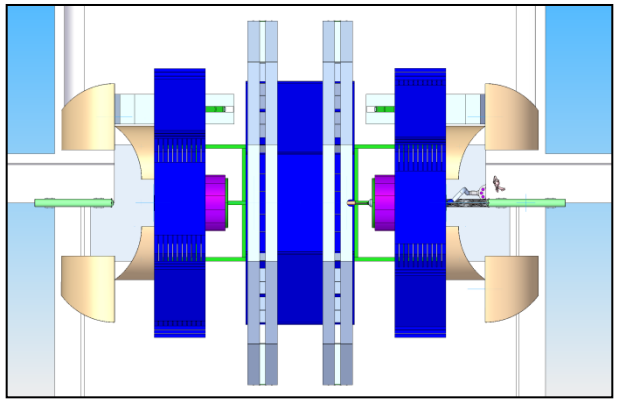

8

Pacmen closed: Modified to allow ILD opening

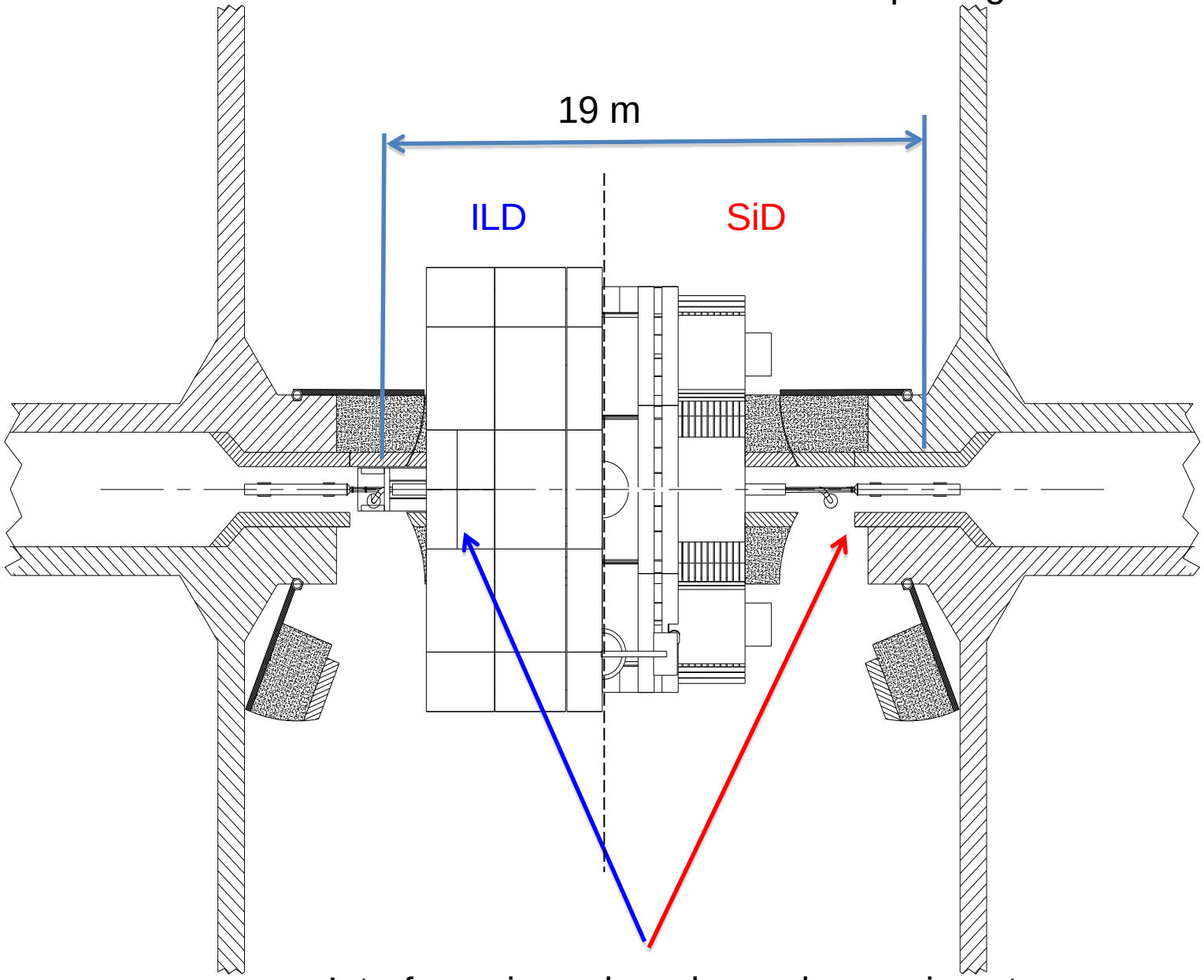

Interface pieces born by each experiment

Pacmen open

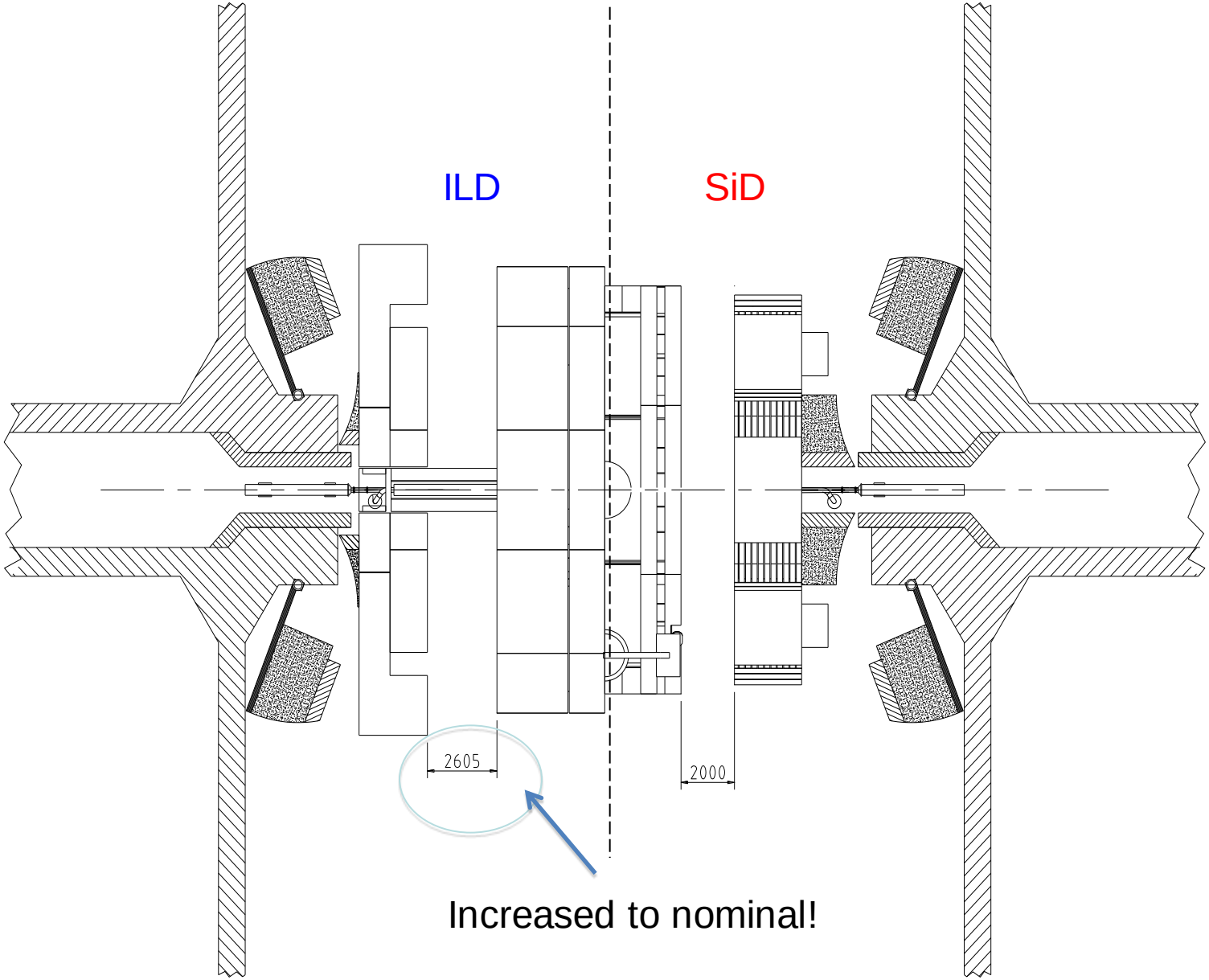

Increased to nominal!

LHC IR layouts

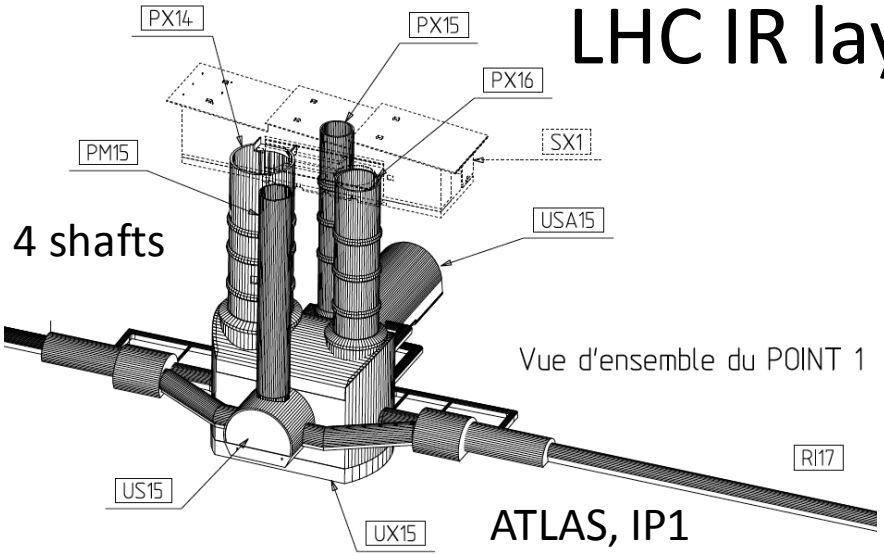

4 shafts

ATLAS, IP1

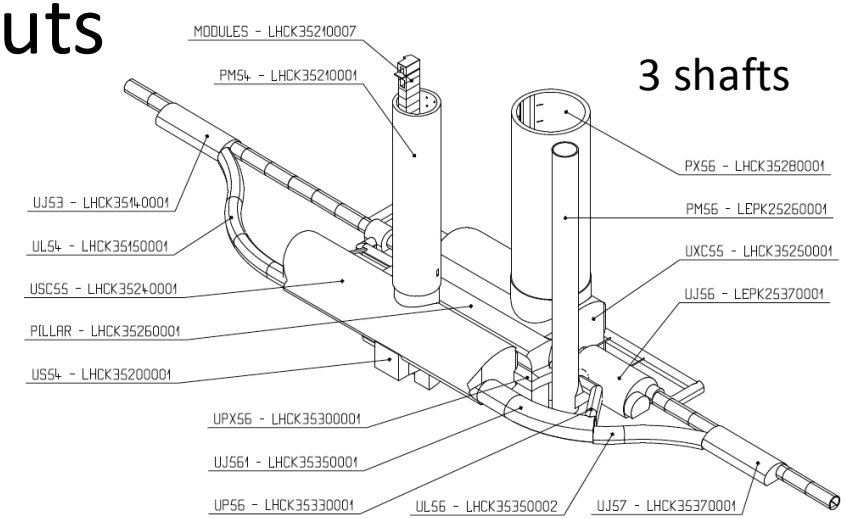

3 shafts

CMS, IP5

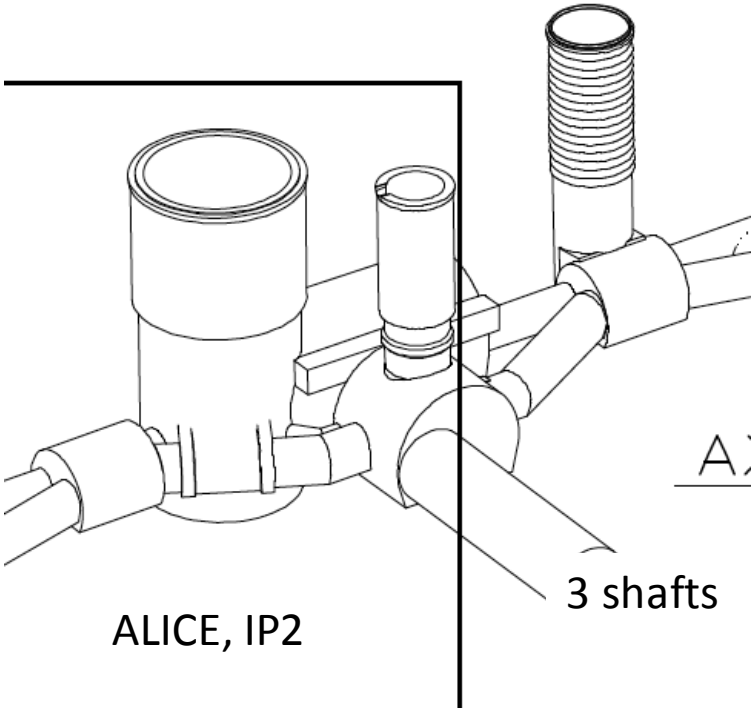

3 shafts

ALICE, IP2

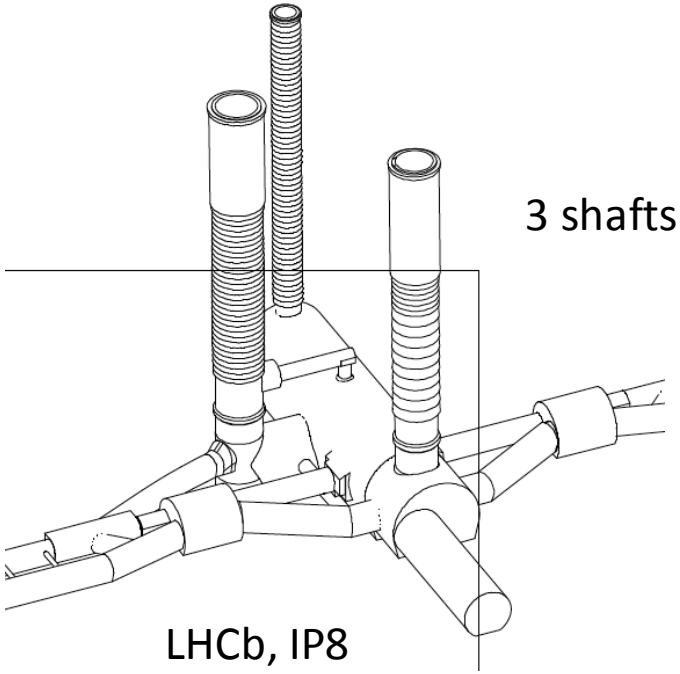

3 shafts

LHCb, IP8