ILC DAQ issues

By P. Le Dû

Patrick.le-du@cea.fr

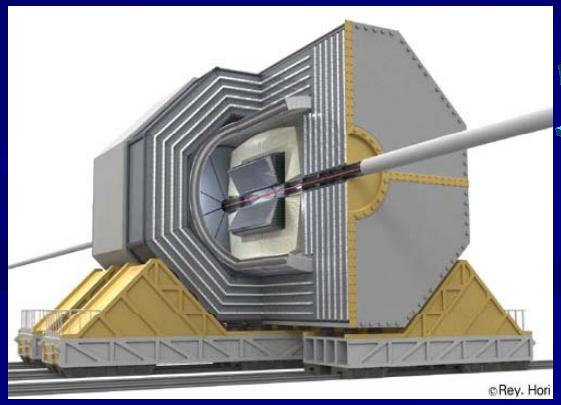

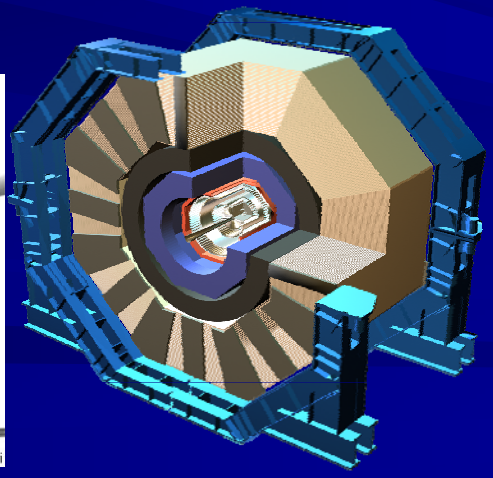

QuickTime™ et un
décompresseur TIFF (LZW)
sont requis pour visionner cette image.

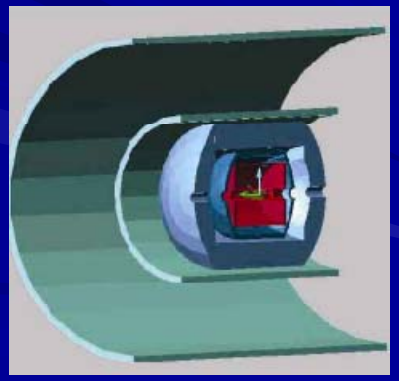

Software Trigger concept → No hardware trigger !

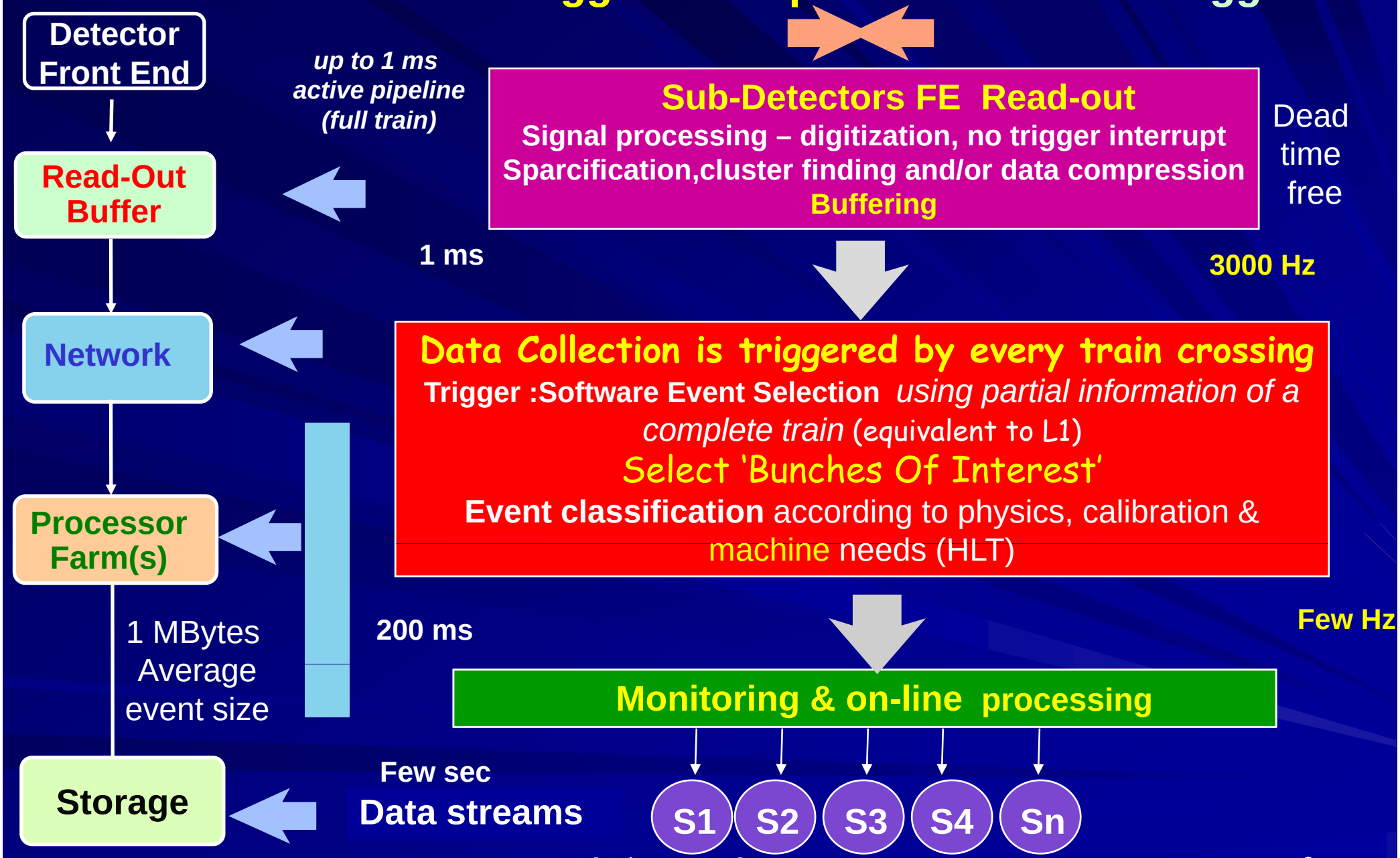

ILC DAQ conceptual (GLD) Architecture

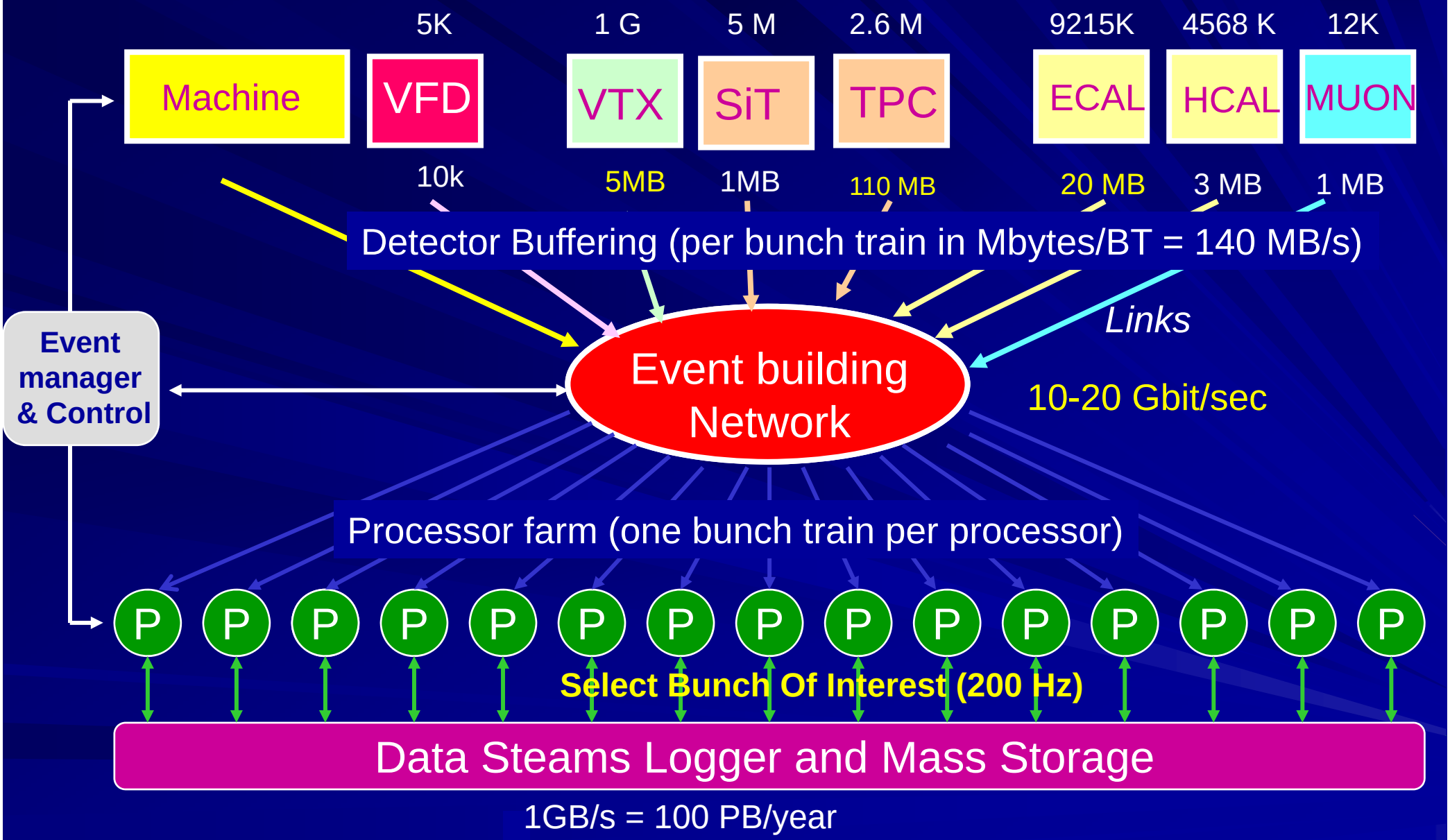

1GB/s = 100 PB/year

About systems boundaries …..moving due to !
→ evolution of technologies,sociology …..

NEW !

Machine
Synchronization
Detector feedback
Beam BT adjustment

Subdetectors
FE Read Out
Signal processing
Local FE Buffer

Uniform interface

Read out Node
Partitionning
(physical and logical)

Full Integration
of Machine DAQ
In the data
collection system

Data Collection (ex on-line)
Bunch Train data collection from Buffer RO
Bunch Of Interest selection
SW trigger & algorithms
Event Building
Control - supervisor
On line Processing
Global calibration ,monitoring and physics
Local (temporary) Data logging (Disks)

Global Detector Network (worlwide)
- Detector Integration
- Remote Control Rooms (3?)
  - Running modes
    - Local stand alone
    - Test
    - Global RUN
  - Remote shifts
    - Slow control
    - Detector Monitoring
- Physics & data analysis (ex On- Off line)
  - Farms
  - GRID …
- Final Data storage

Somes Issues

To be discussed in specific meetings

- Cosmic trigger ?????
  - Very useful during installation and debugging
  - Compatibility with power cycling ????
- Clock, machine synchronization and timing distribution
  - with experts from LHC ! (Ph. Farthouat)

Current view of a uniform RO architecture

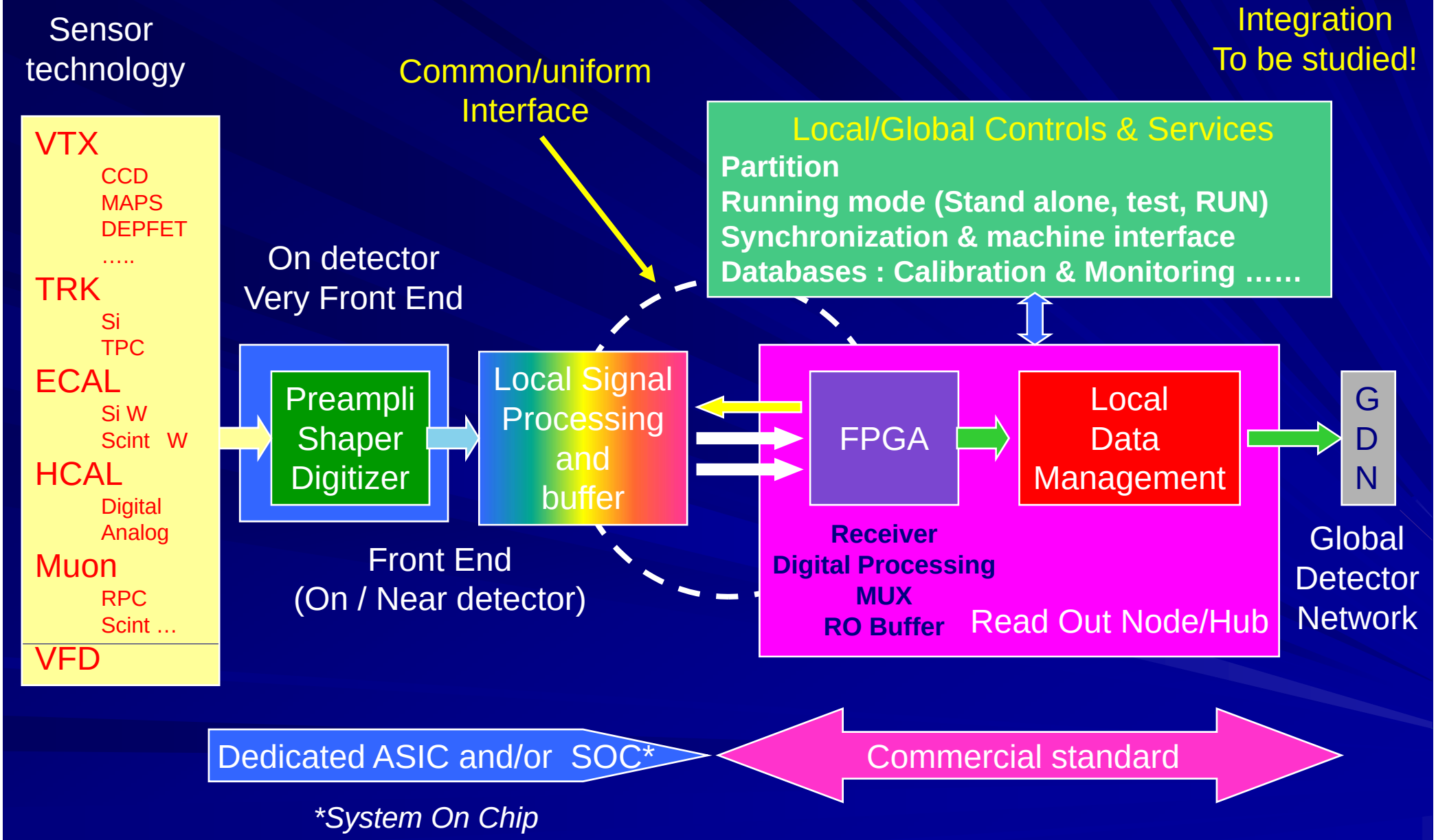

ILC 'today' Data Collection Network model

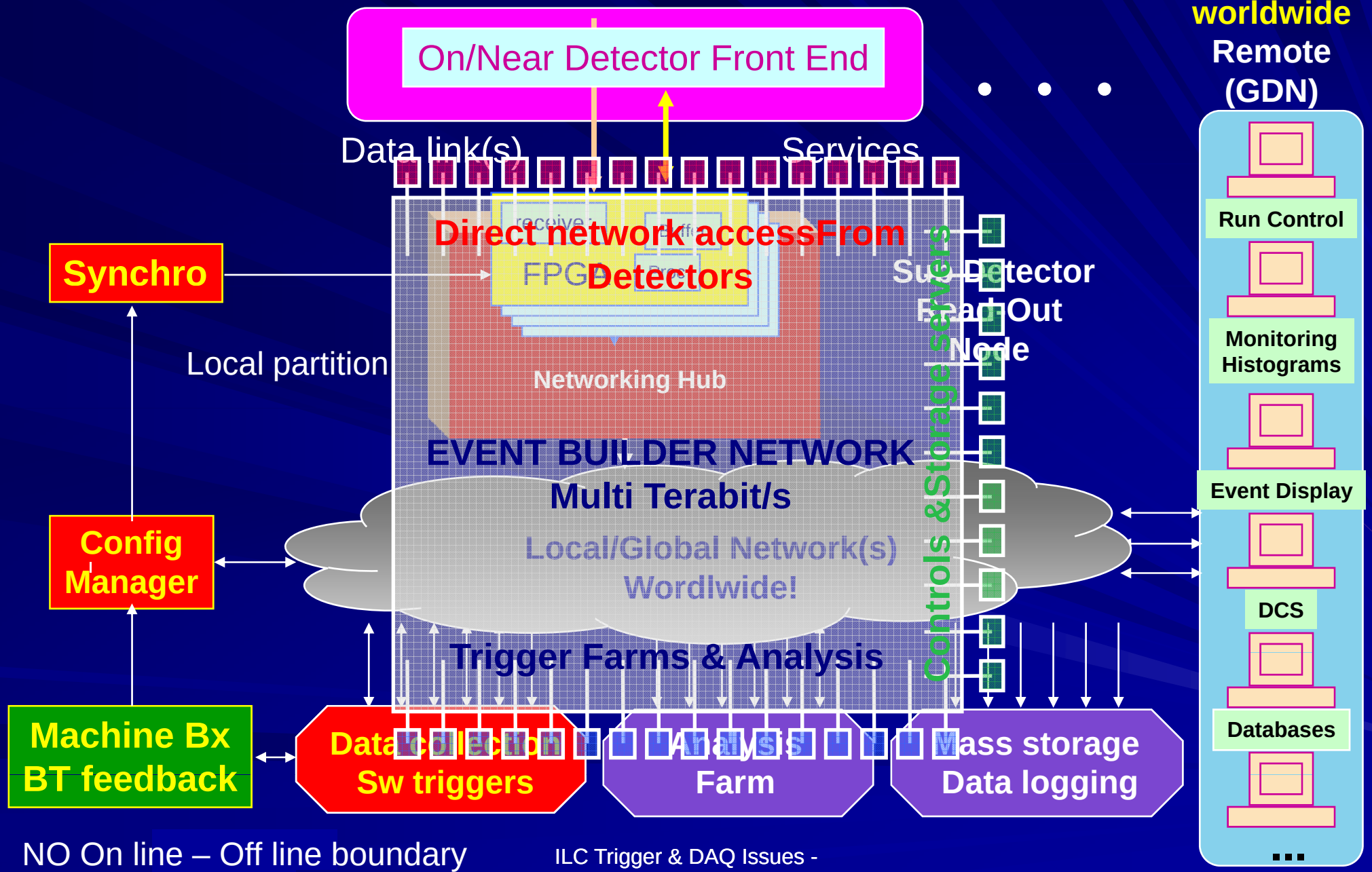

NO On line – Off line boundary

Trigger & Event Analysis COMPUTING MODEL

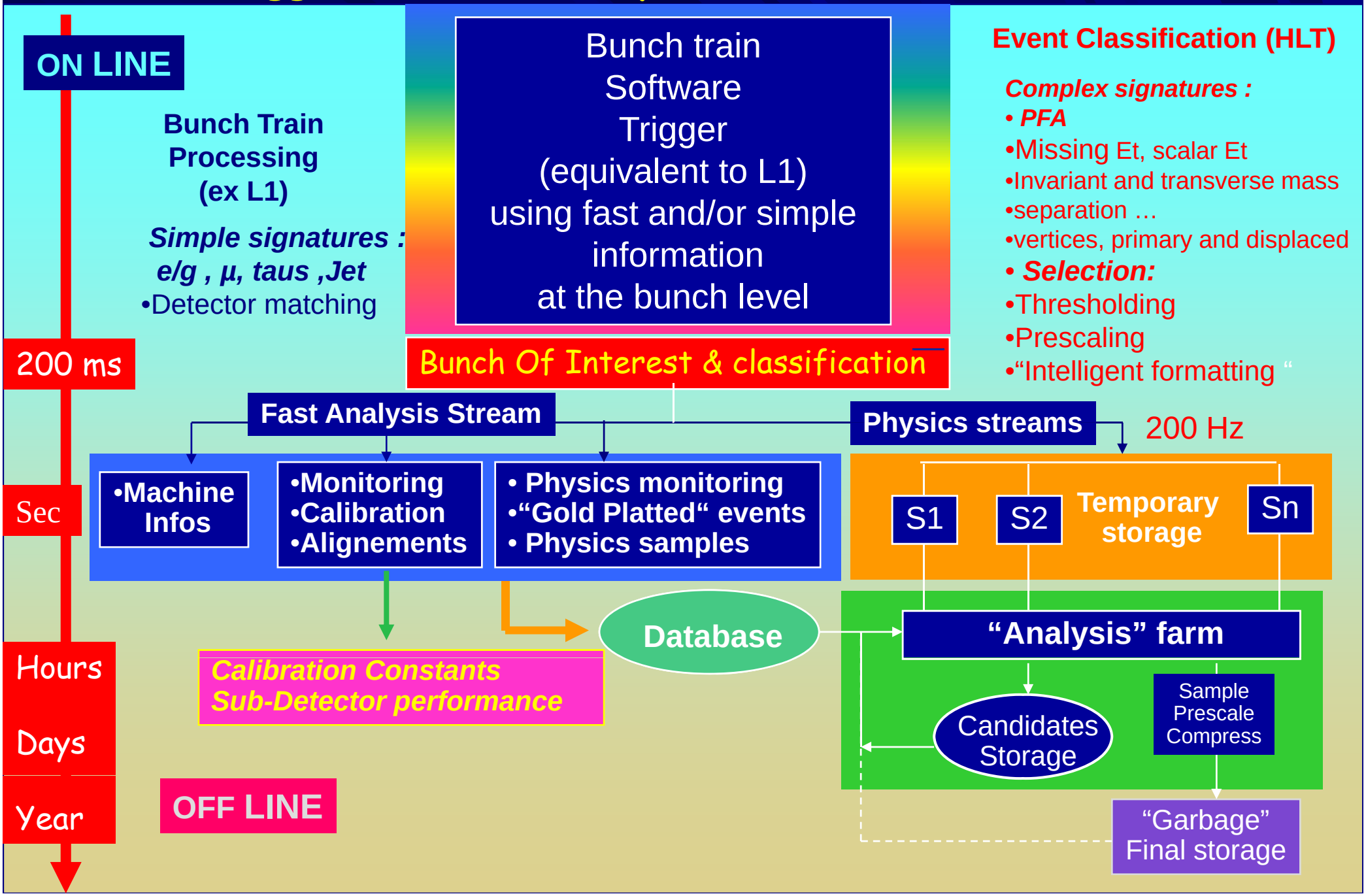

Computing and communication trends

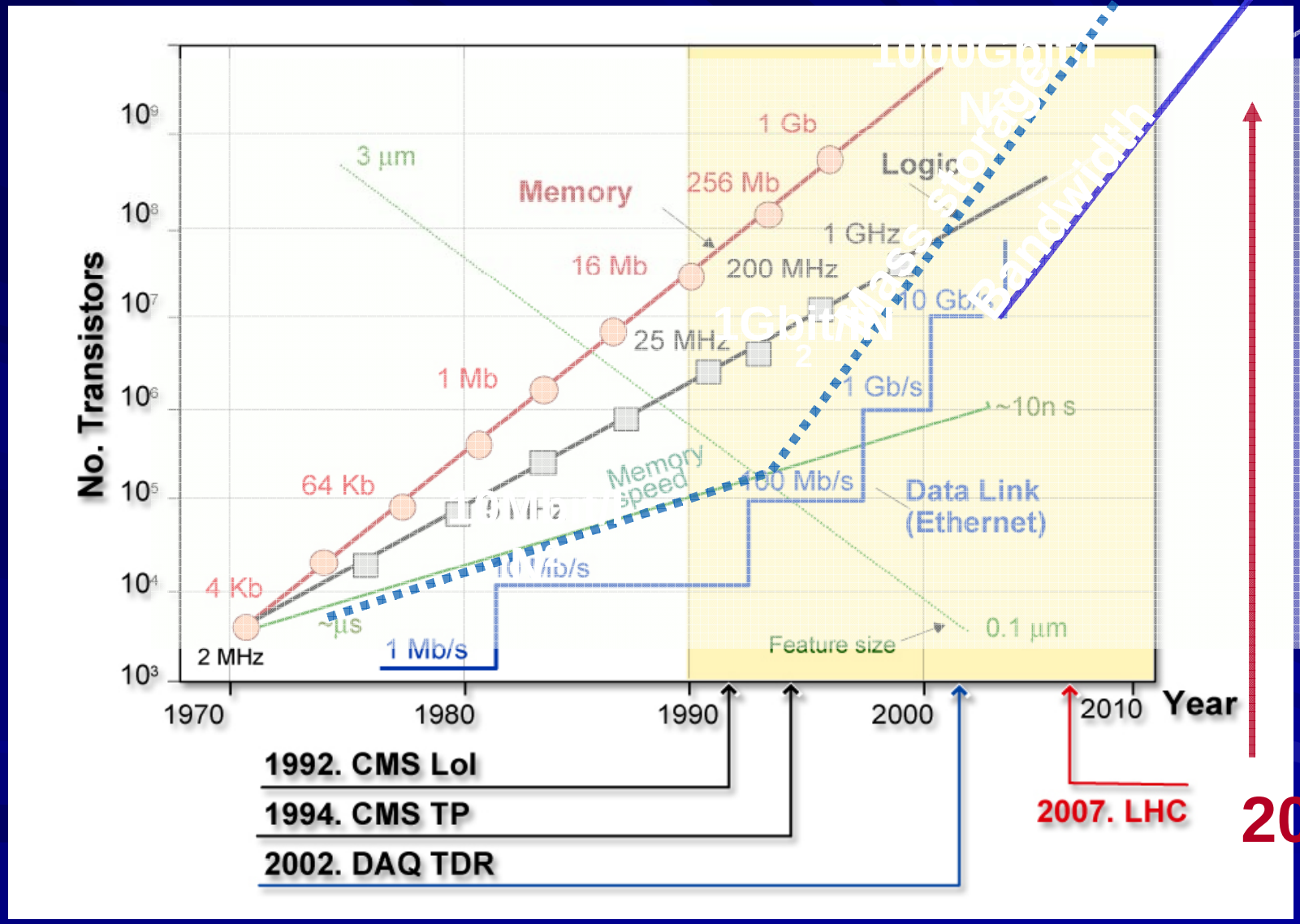

Read Out evolution LHC --> ILC

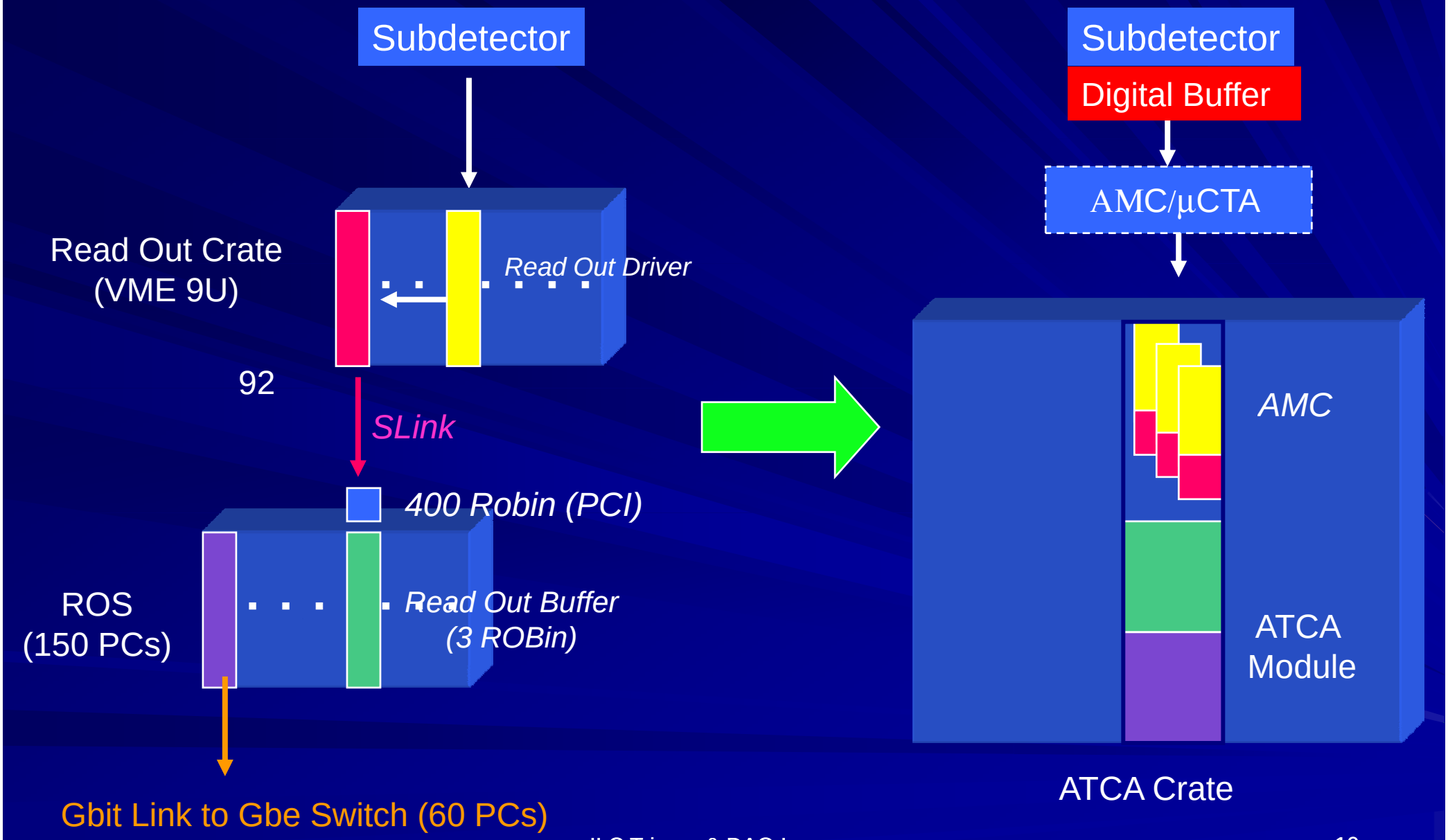

What next

- Common work with Machine CTRL group
  - ATCA
  - GAN
  - (Slow) Controls
- Look for EUDET 2 ???? Workplans
  - ATCA experience
  - Global (Test beam) Detector networking
    - Between DESY/CERN,FNAL/SLAC,KEK ????