Wire Position Monitors for S1G cryomodules

04.20.2009 H. Hayano

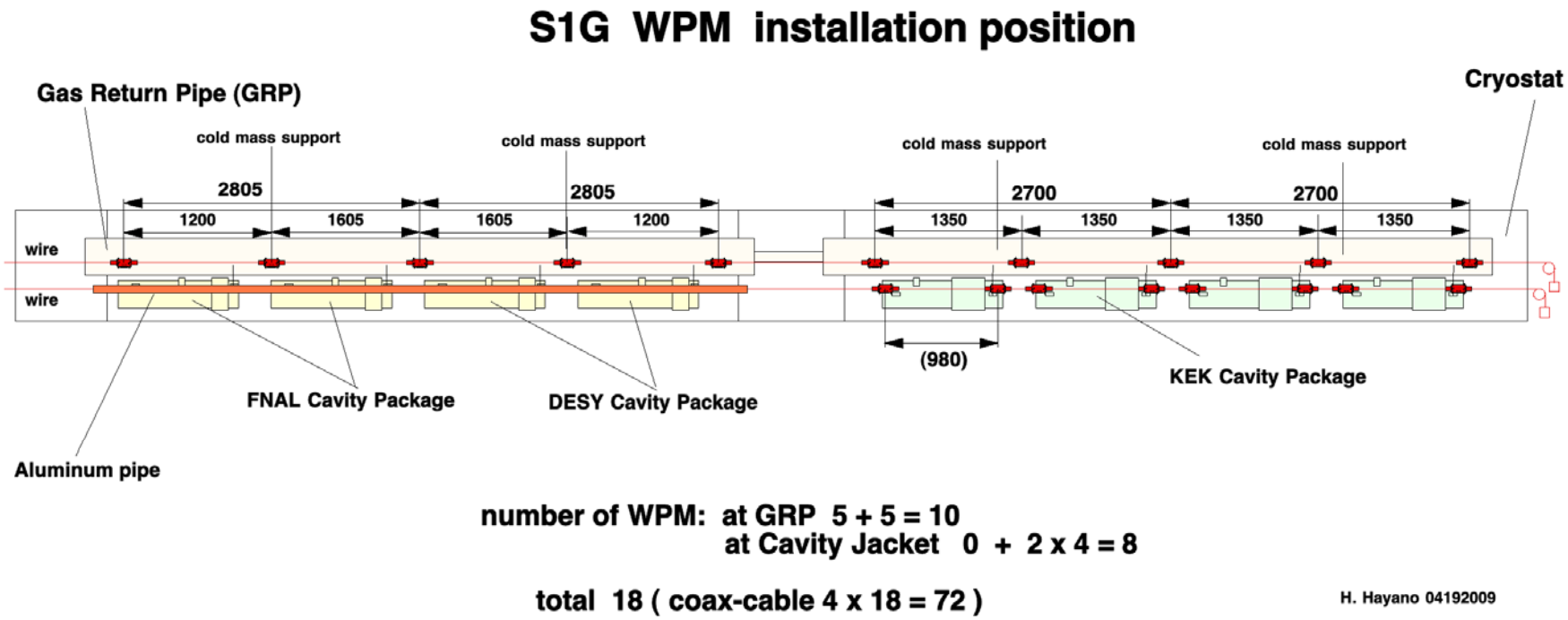

5 WPMs for each GRP
no WPM for FNAL&DESY cavities
2 WPMs for KEK cavities

WPM installation for Module C GRP

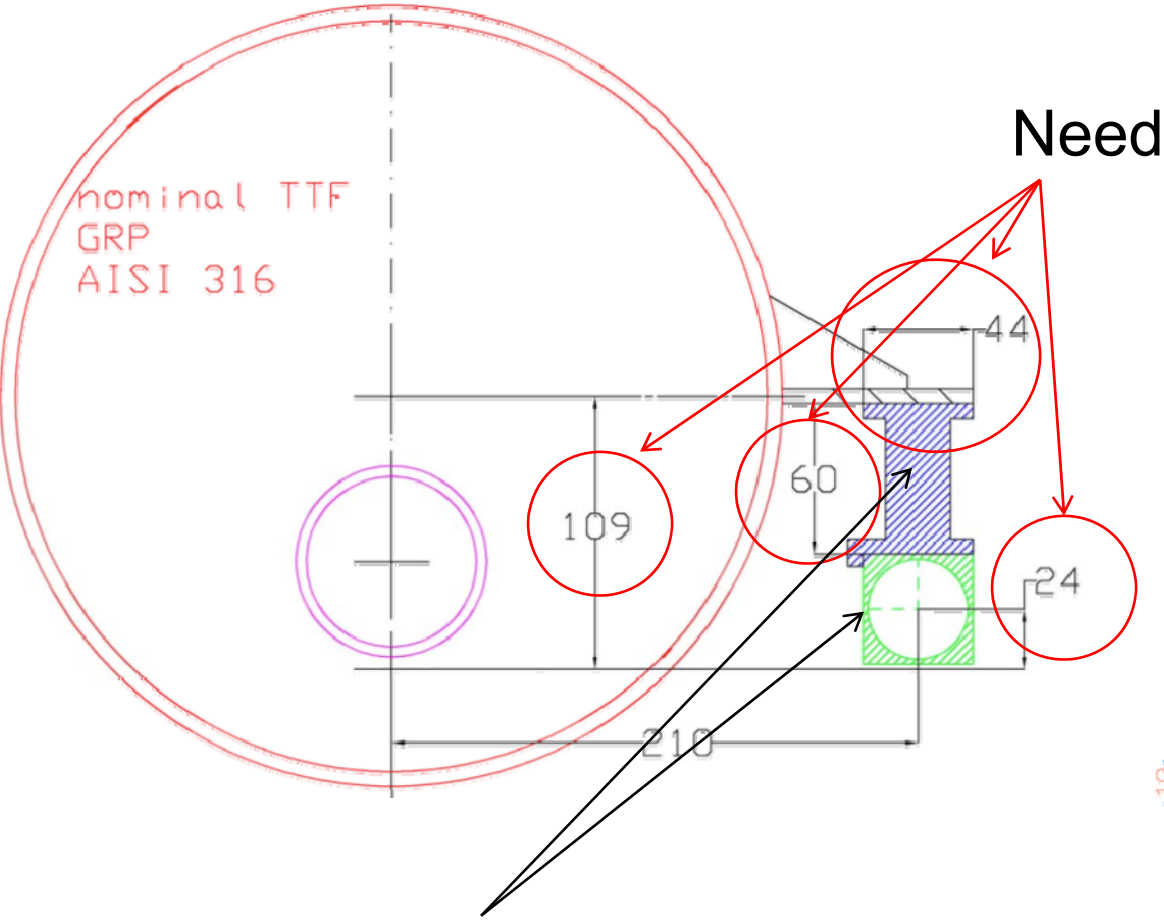

Need to check the dimension

Zanon drawings is different from these.

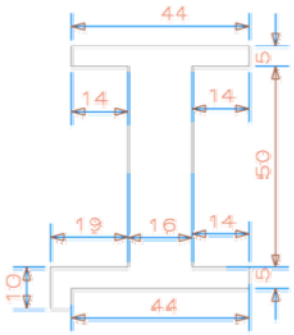

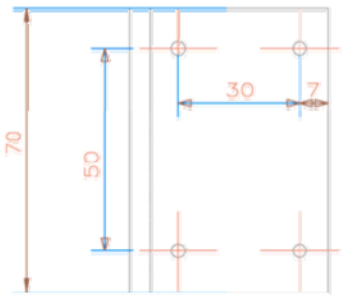

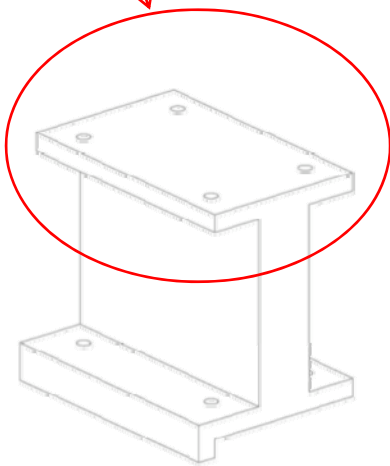

KEK fabricate and bring to INFN

5 WPM adaptors
5 WPM pick-ups
4 connection aluminum tubes
20 signal cables (8m length)

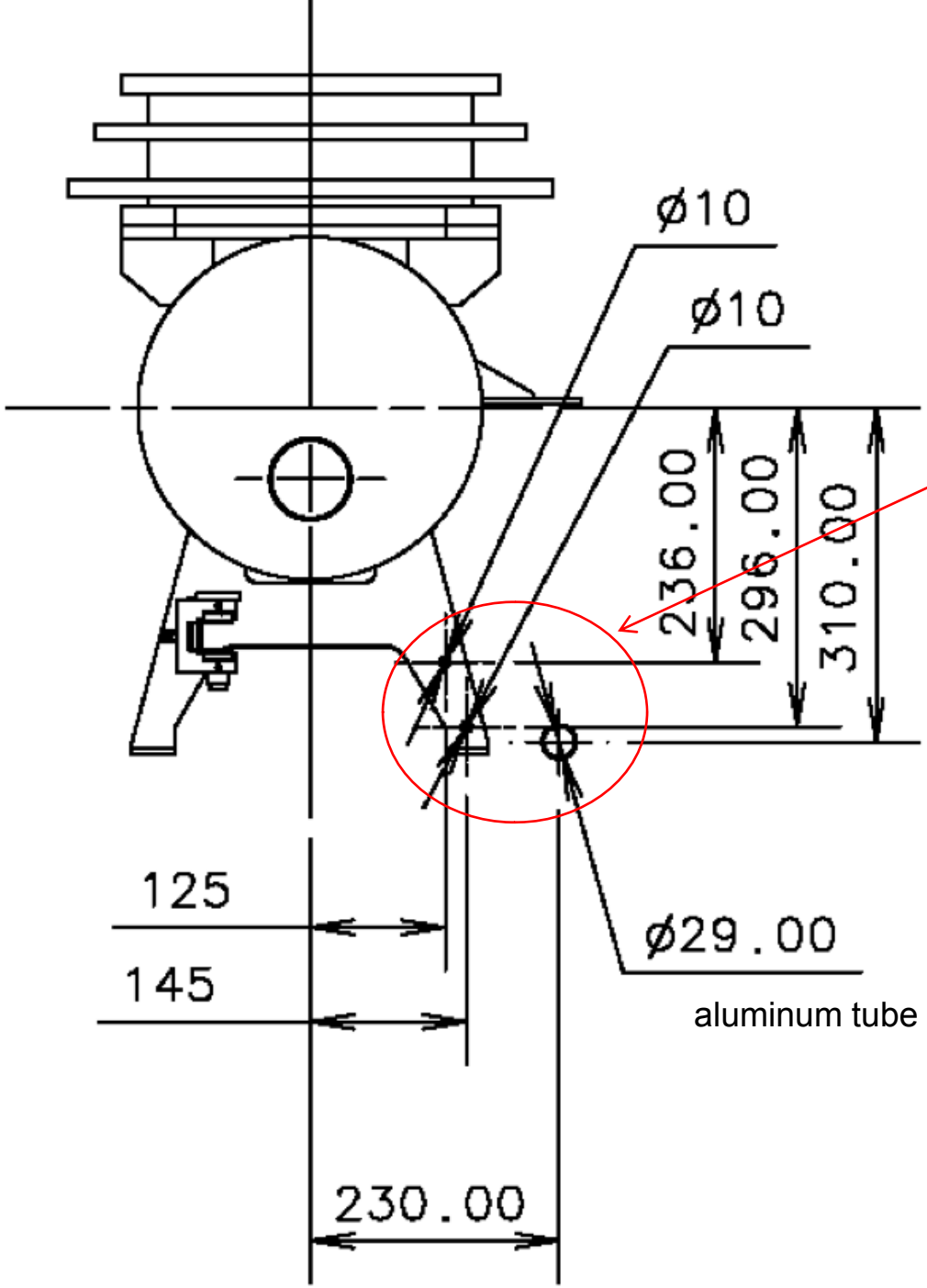

KEK need to fabricate
8 aluminum tube holders

installation is at KEK

aluminum tube for cavity wire

WPM pickup

electrode-SMA connector weld was revised

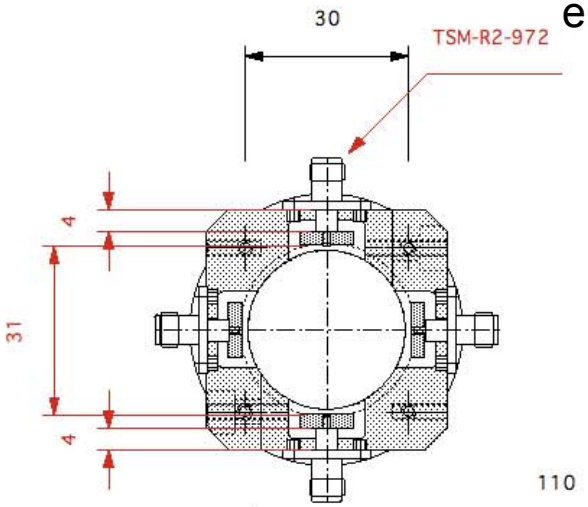

Aluminum body

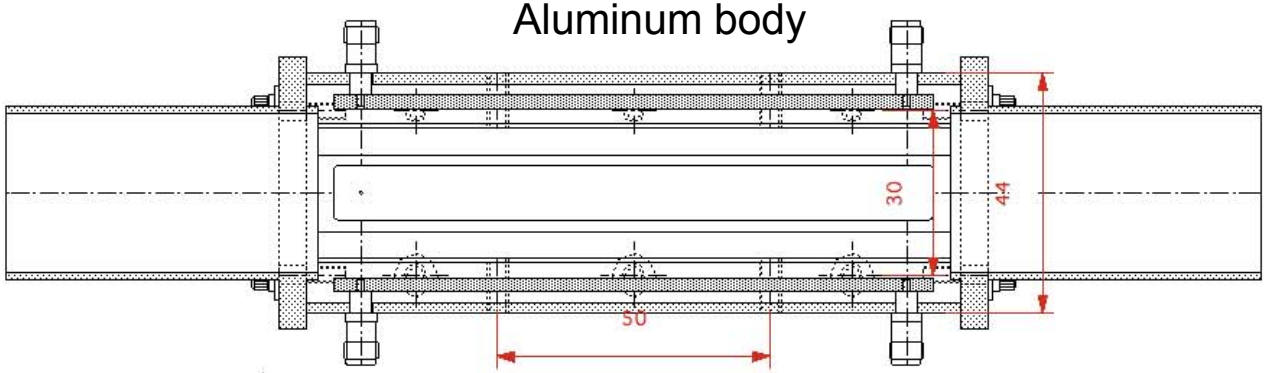

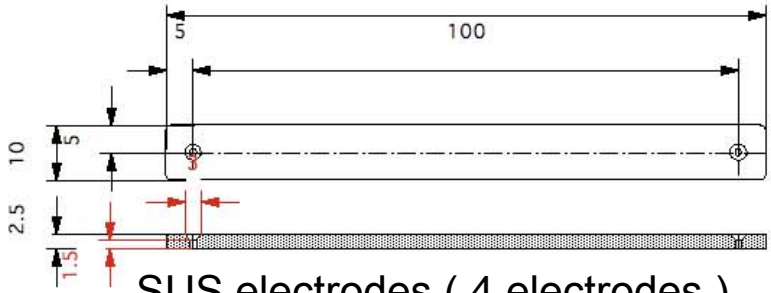

SUS electrodes (4 electrodes)

Al connection tube with finger-contactor

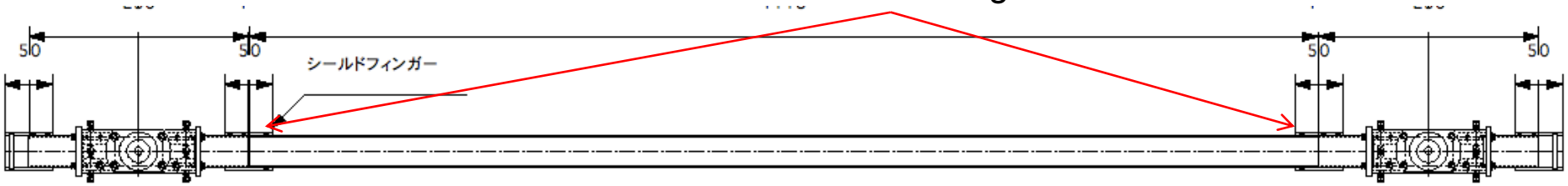

WPM Al tube WPM

Wire Position Monitor Mount
Detail design without adjuster

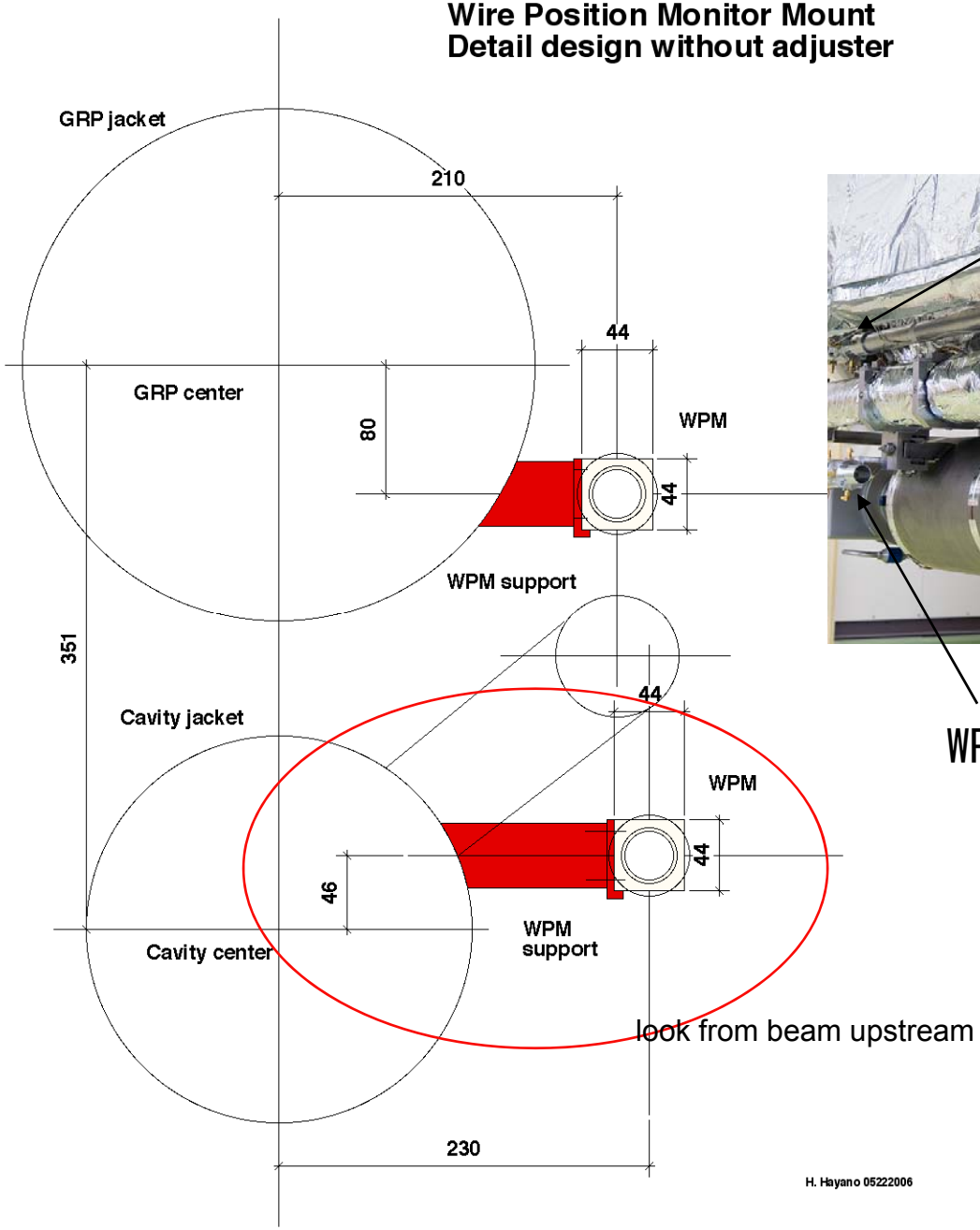

look from beam upstream

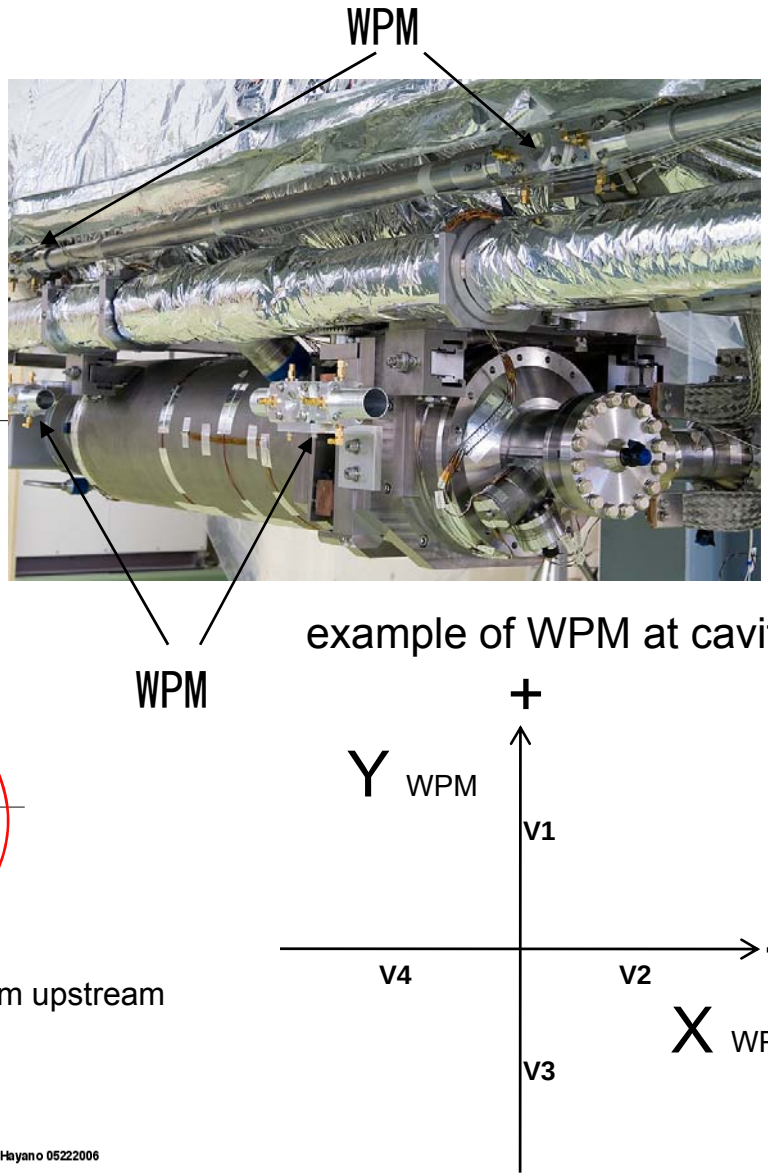

example of WPM at cavity

look from beam upstream

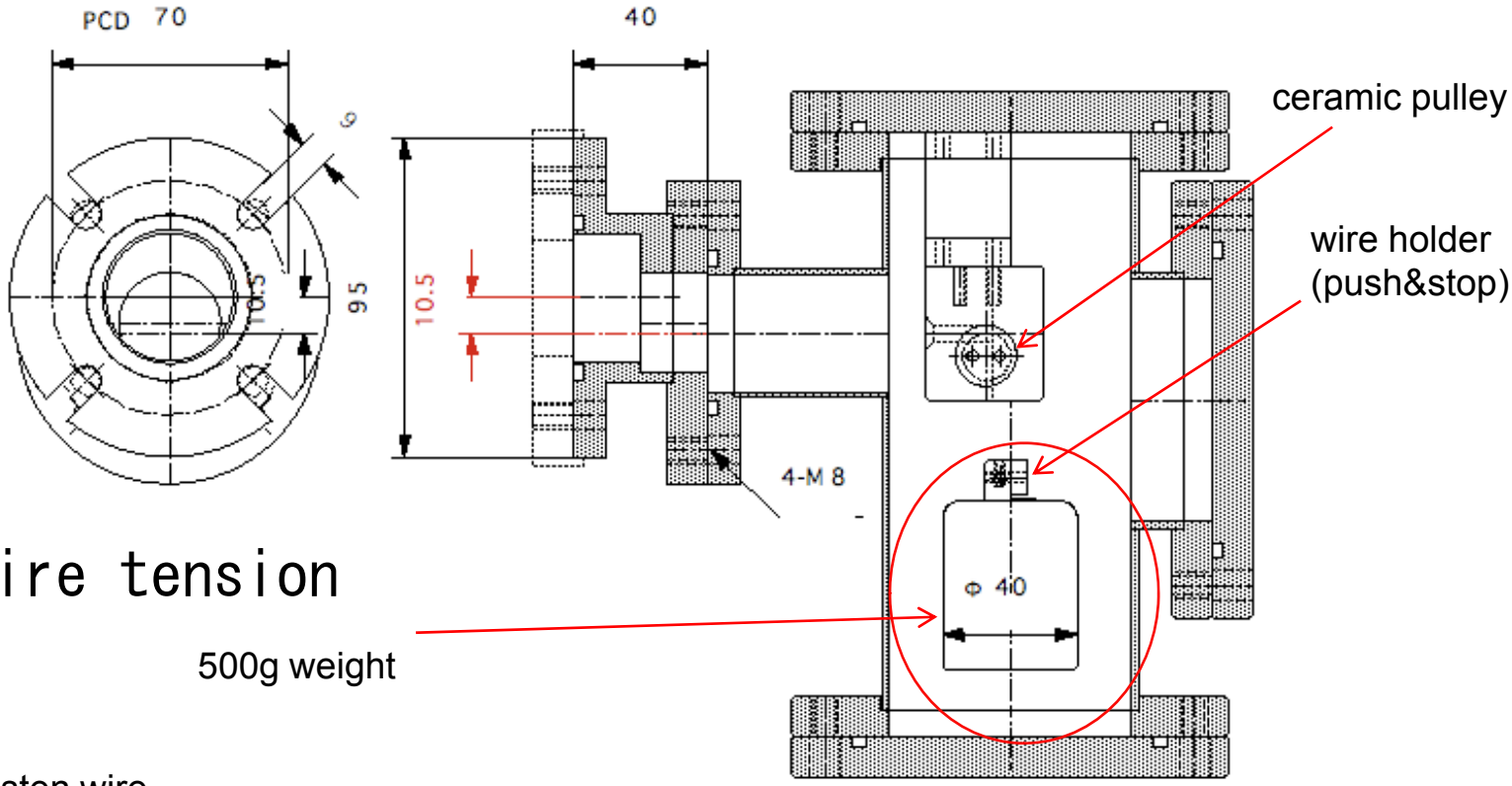

Wire tension

500g weight

70μm diameter
gold plated tungsten wire

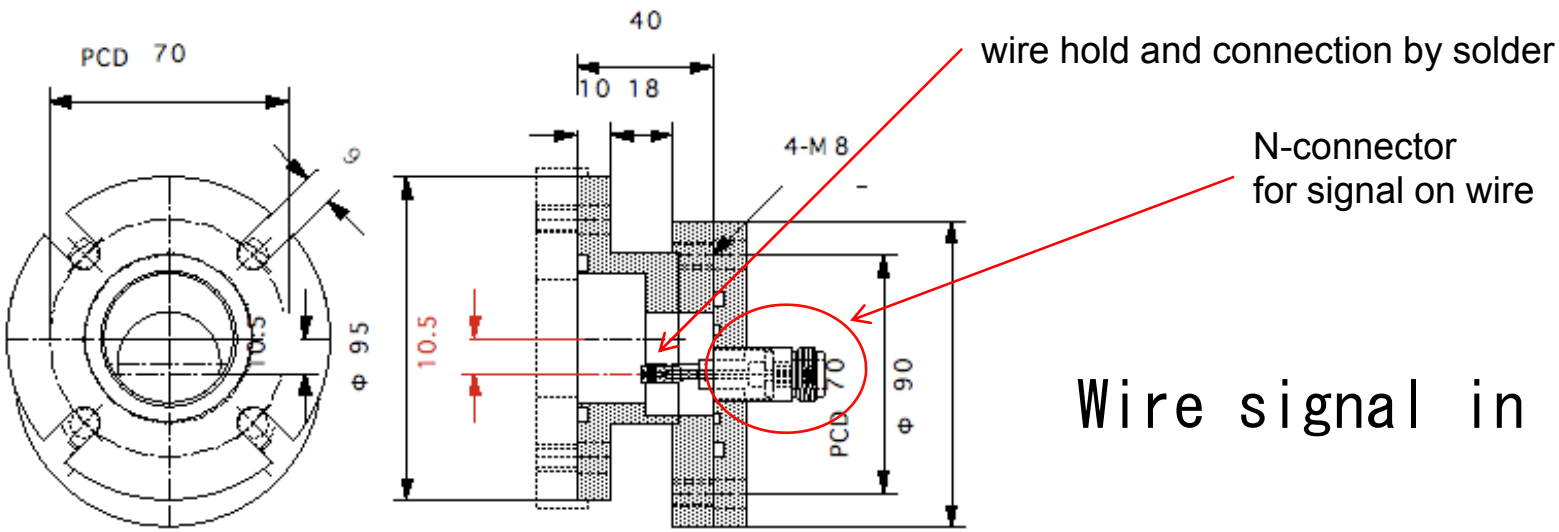

Wire signal in

calculation and measurement of 10m wire sag

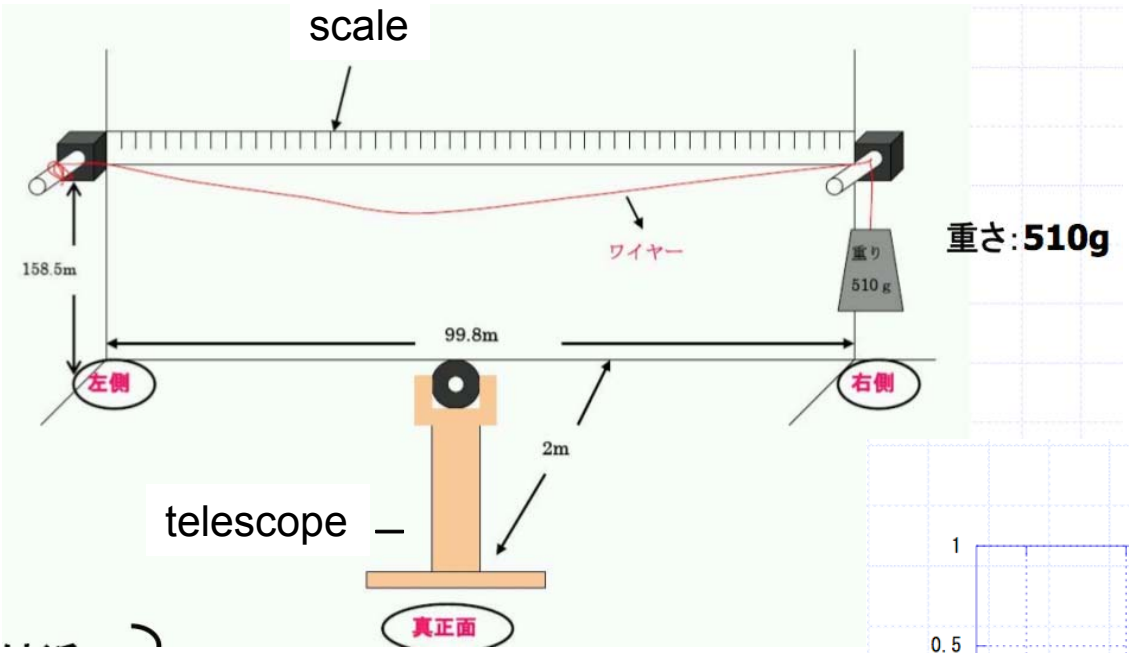

wire: ø70μm
gold plated tungsten wire

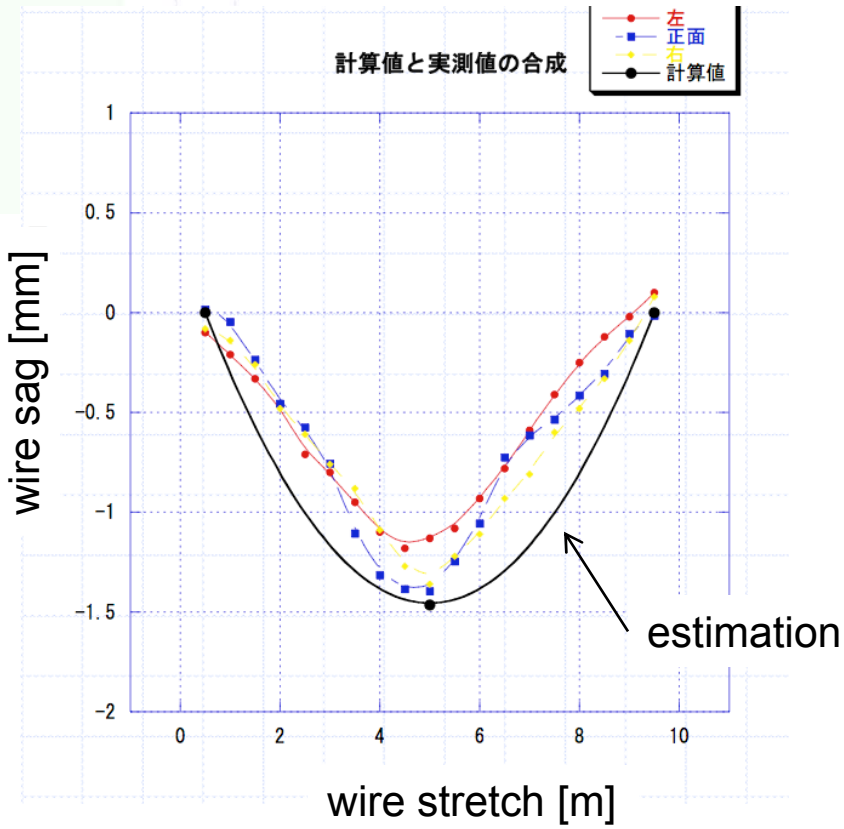

1.4mm sag was measured.
（estimation 1.475mm）

＊for 36m module case, sag is 19.1mm

Existing signal detectors

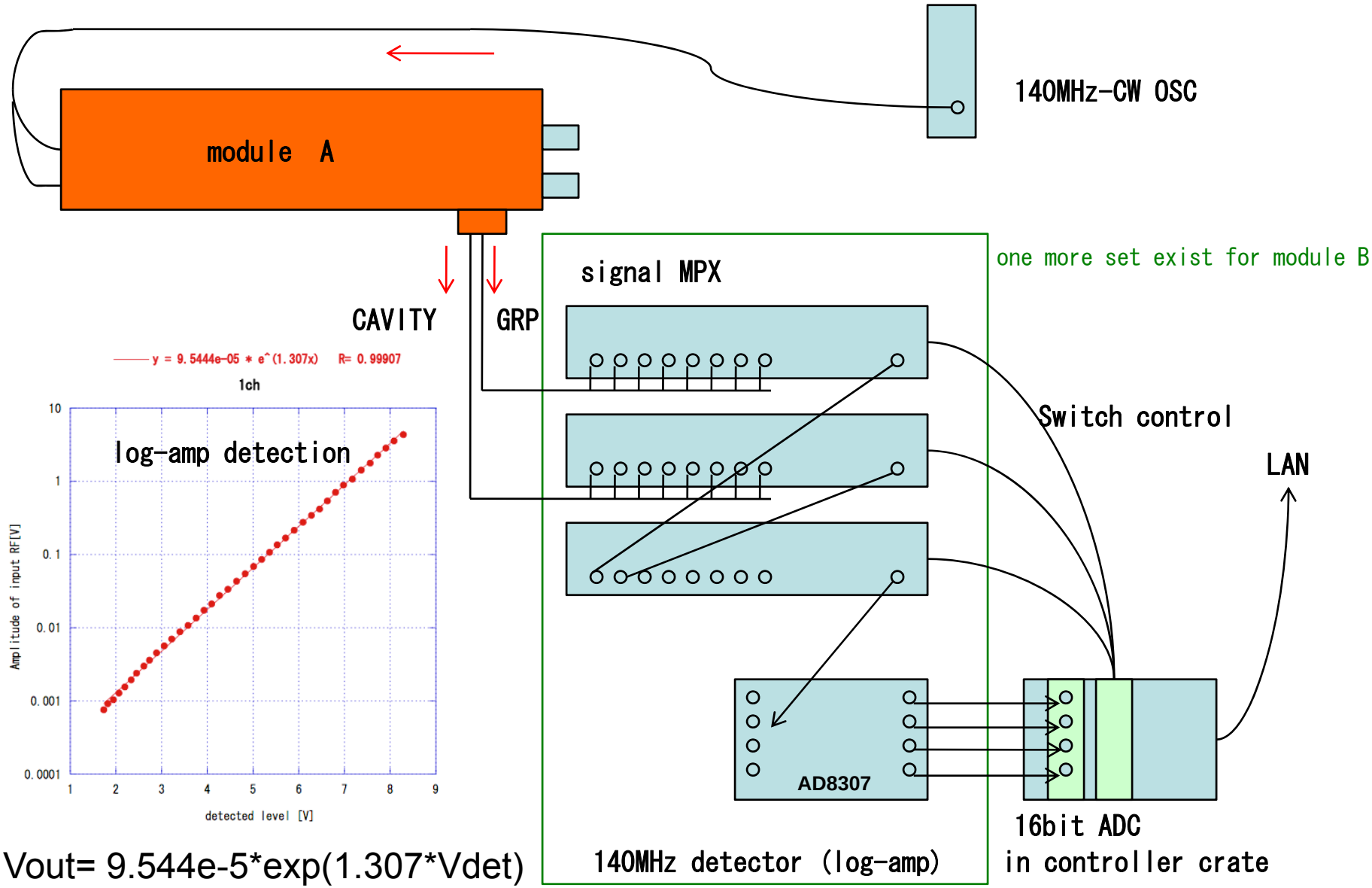

Vout= 9.544e-5*exp(1.307*Vdet)

+/- 2mm map (wire was moved in step-wise)

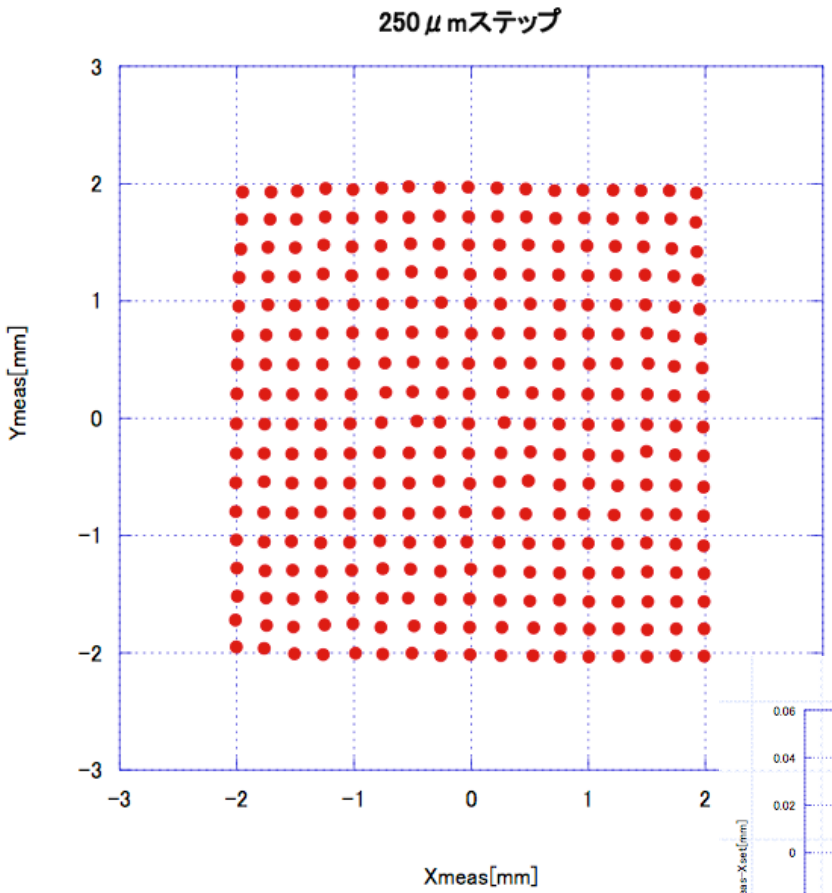

calculation formula :

X = kx * (V2-V4)/(V2+V4)

Y = ky * (V1-V3)/(V1+V3)

(linear approximation)

Kx=Ky=7.262 mm

140μm error in full width

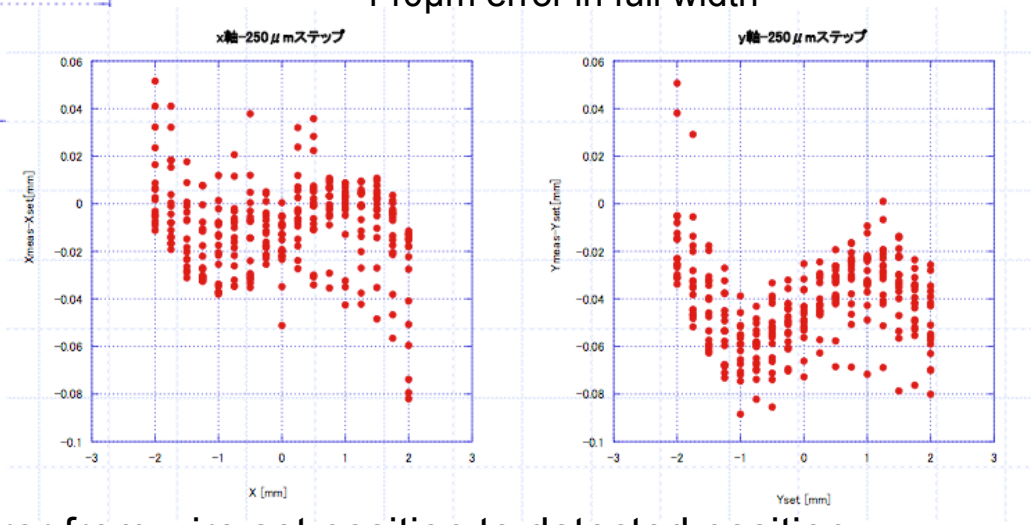

error from wire set position to detected position

position detection for 5μm step wire movement

Y

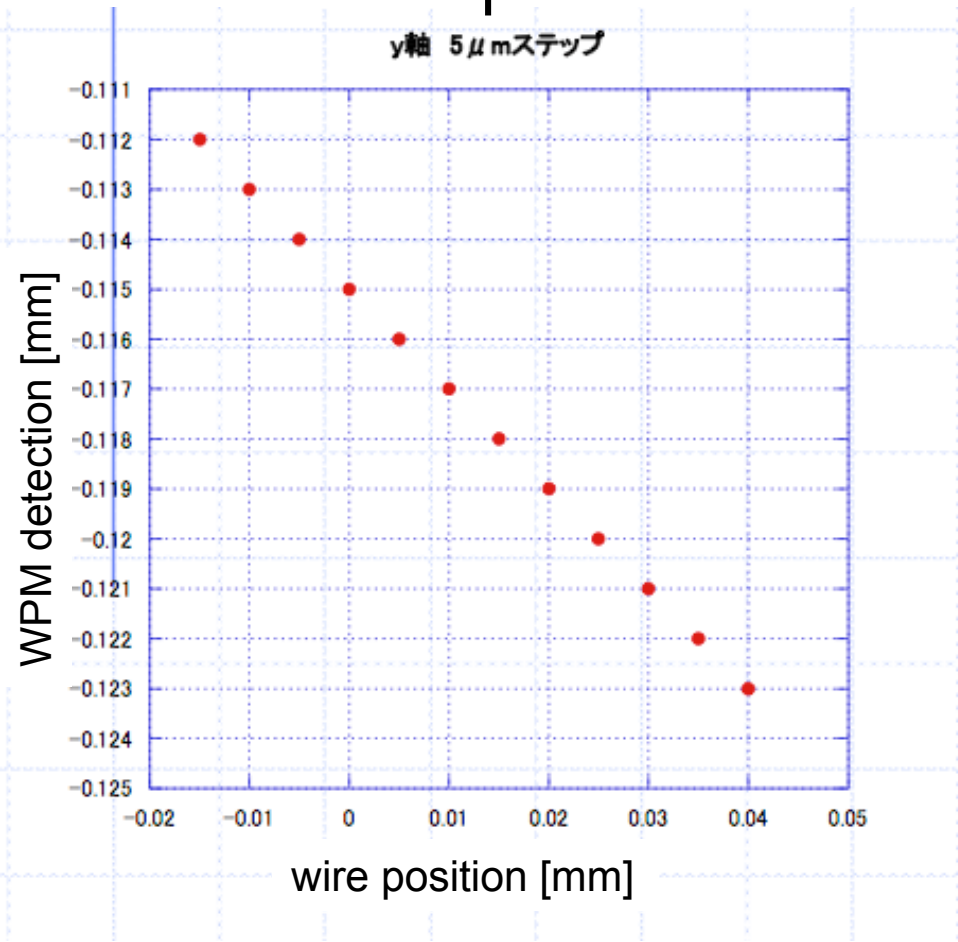

X

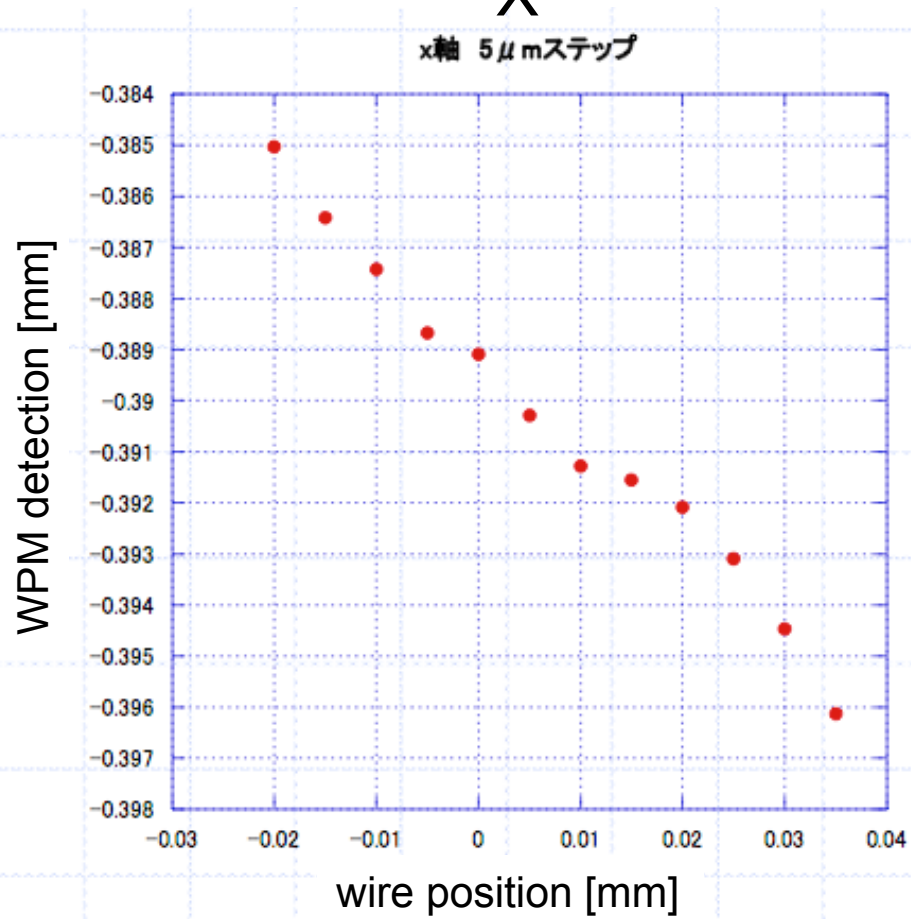

resolution will be less than 5μm.

pulse RF system for S1G

(under plan)

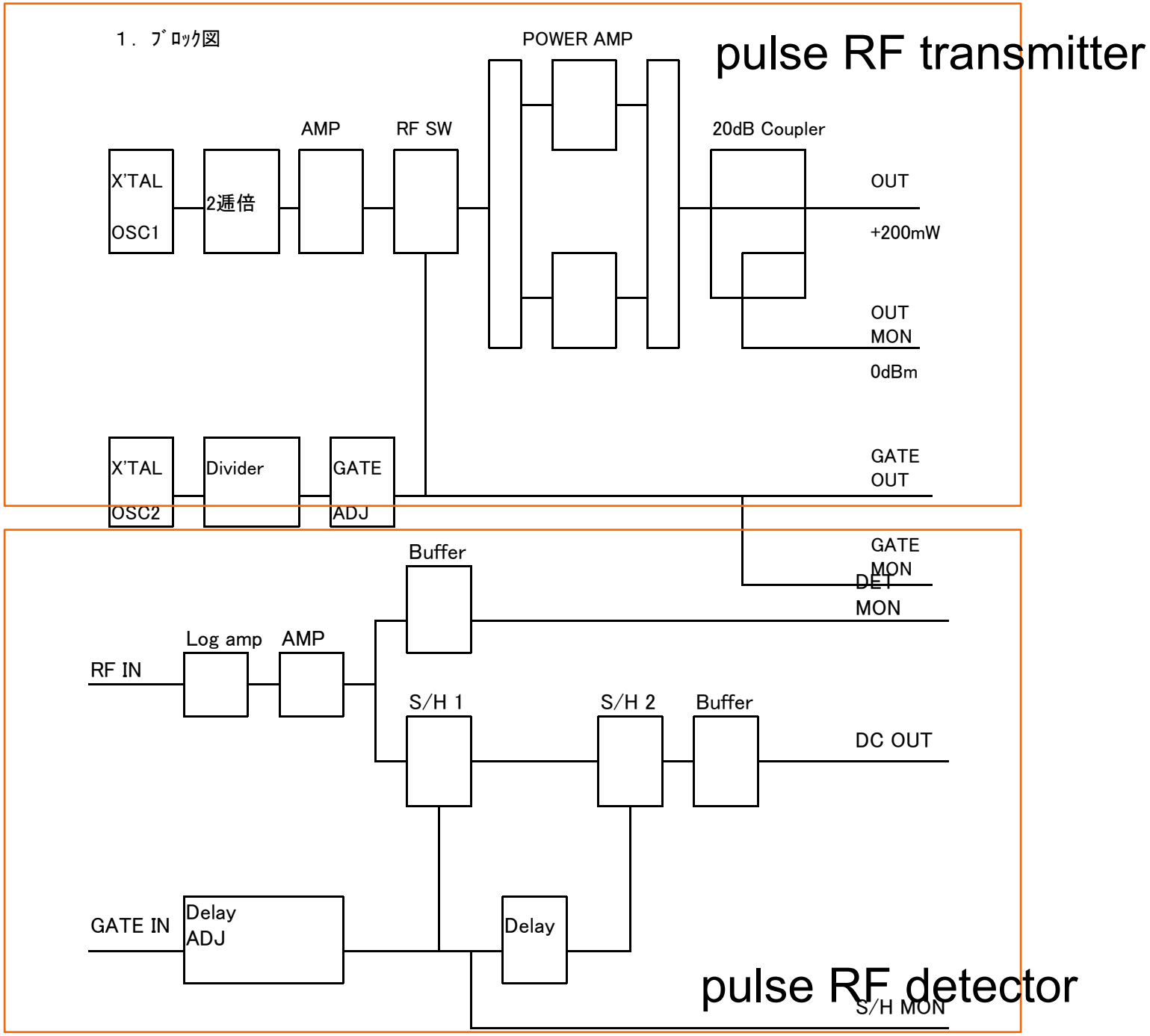

Plans for WPM at S1G

1. Fabrication of WPM adapters & connection pipes (for GRP) by end of August.

2. Fabrication of connection pipes & pipe holders (for module C cavity side) by end of October.

3. New pulsed RF system by end of June, and system overall check in September cool down.