The EUDAQ Data Acquisition System

Emlyn Corrin, 21 October 2010

- Telescope Hardware
- Software
- User Integration
- Recent changes
- The Future of EUDAQ

DAQ Hardware

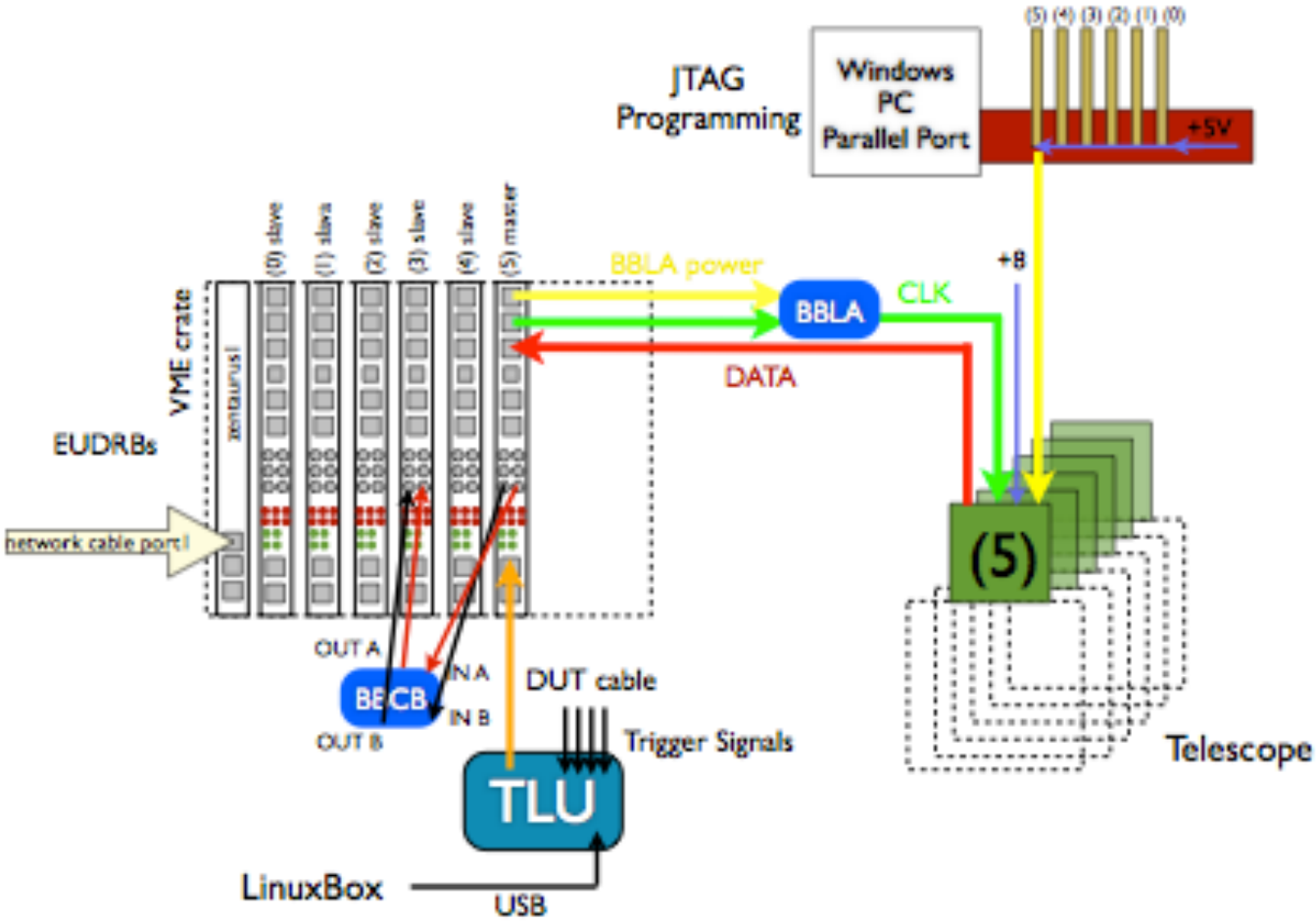

Hardware: TLU

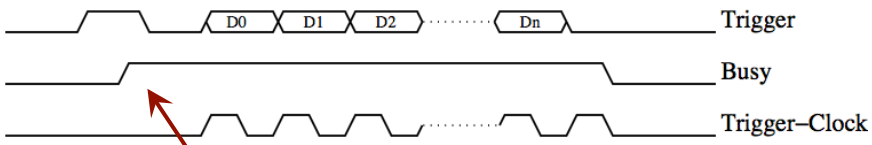

Busy acknowledges the Trigger

Trigger Logic Unit

- Two handshake modes
  - Simple handshake (Trigger/Busy/Reset)
  - Trigger data handshake incl. event number
- Timestamp and event-number via USB
- LVDS via RJ45, NIM and TTL via Lemo (Software-Selectable)
- Inputs for four trigger signals (ANDed, ORed, VETOed)
- Internal trigger mode and scalers for testing
- Low voltage power supply for PMTs
- Special needs for special demands:
  - Low Jitter mode (for TPCs etc.)
  - 'LHC'-users: increased timestamp resolution, central clocking

Hardware: EUDRB

EUDET Data Reduction Board:

- Mother board with ALTERA CycloneII FPGA (clock: 80MHz) hosts core resources and Interfaces (VME64X slave, USB2.0, EUDET trigger bus)
- 2 Daughter cards (analog + digital)
- NIOS II, 32 bit "soft" microcontr. (40Mz) for diagnostitics, pedestal+noise calculation and remote configuration
- Two readout modes: Zero Suppressed for normal data taking, raw readout of multiple frames for debugging or off-line pedestal and noise calculations

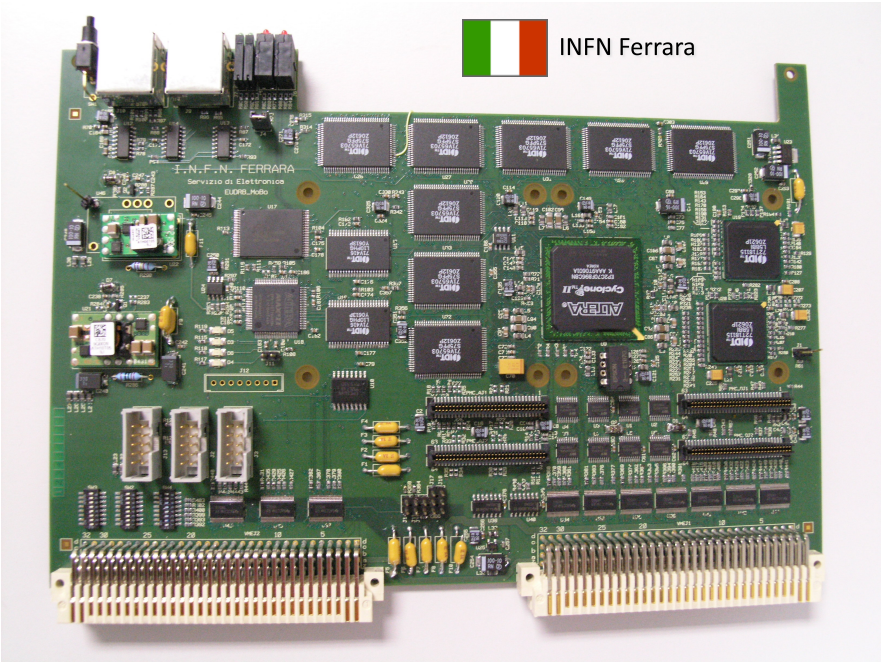

Analog Daughter card based on the successful LEPSI and SUCIMA designs clock rate up to 20 MHz

Digital daughter card drives/receives control signals for the detectors and features a USB 2.0 link

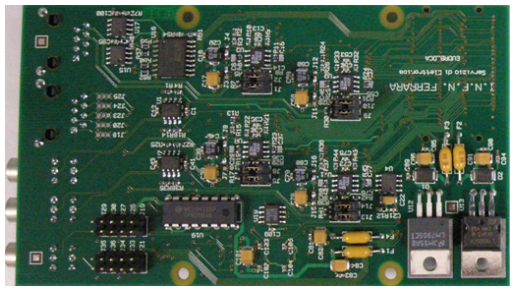

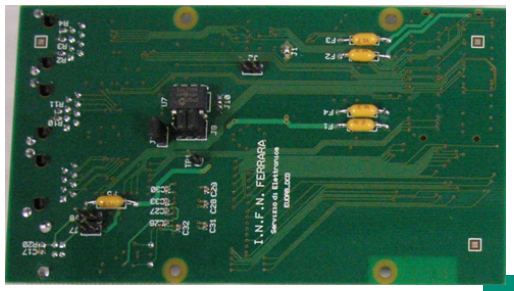

Software: Architecture

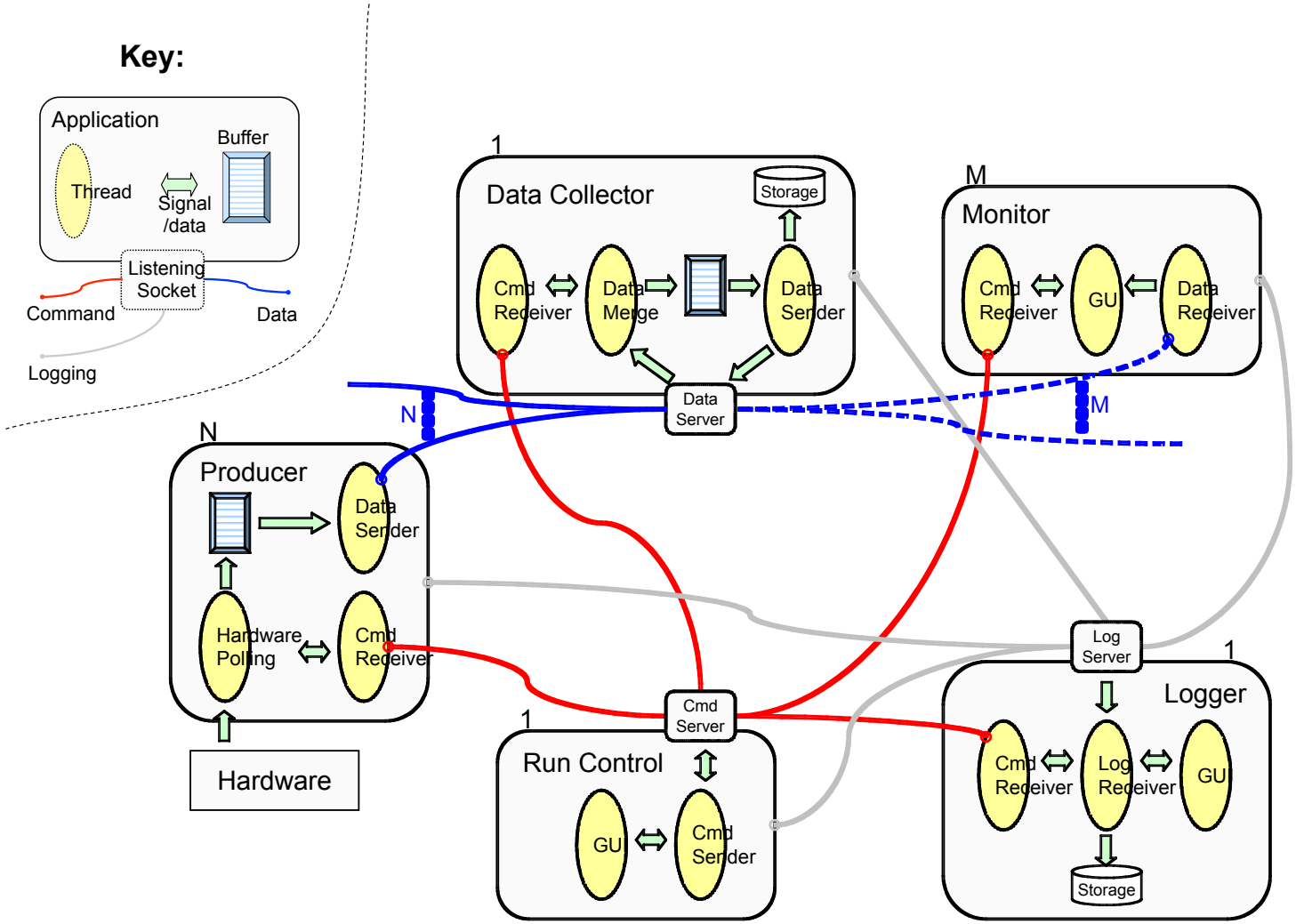

Software: Run Control

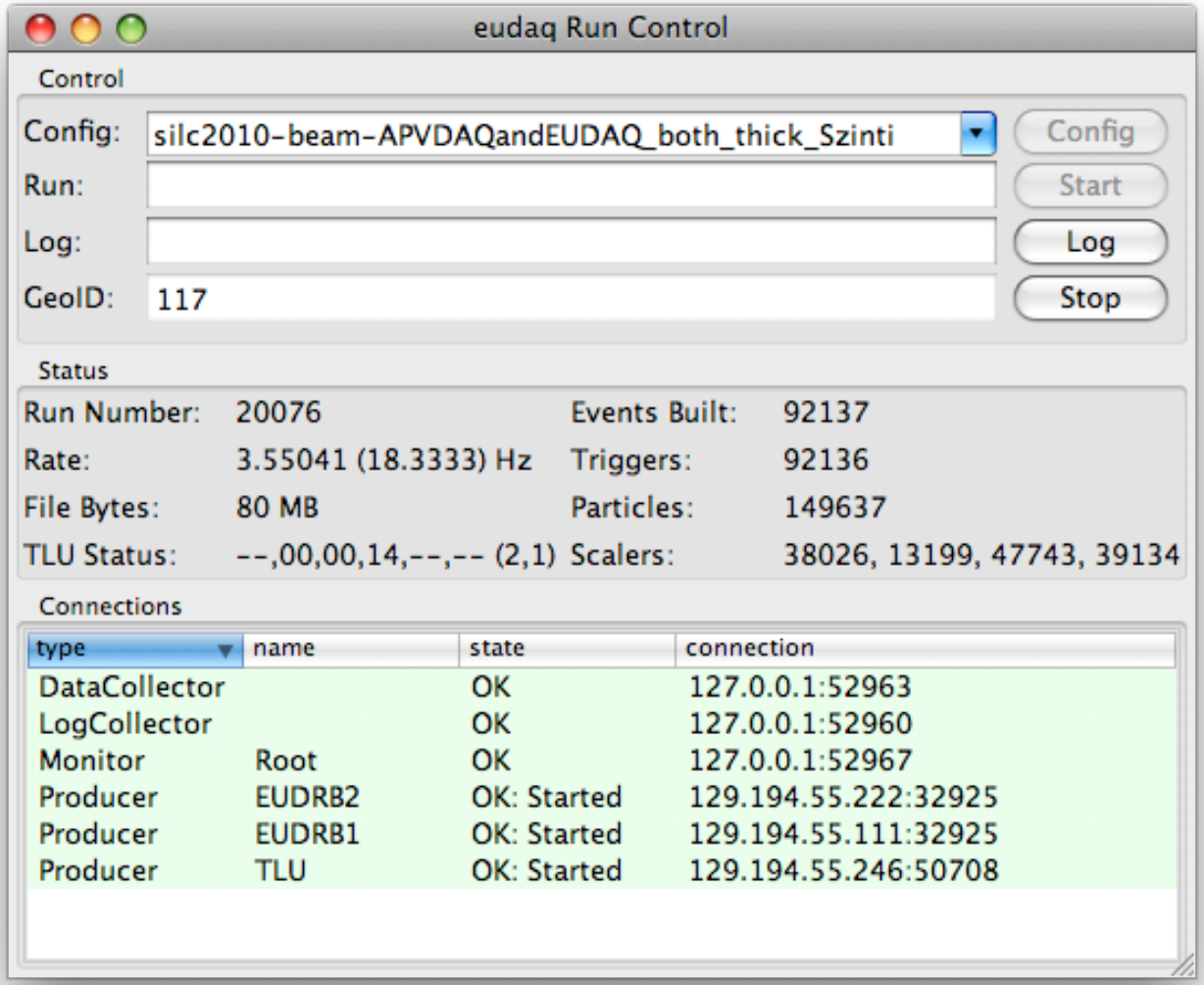

Software: Online Monitor

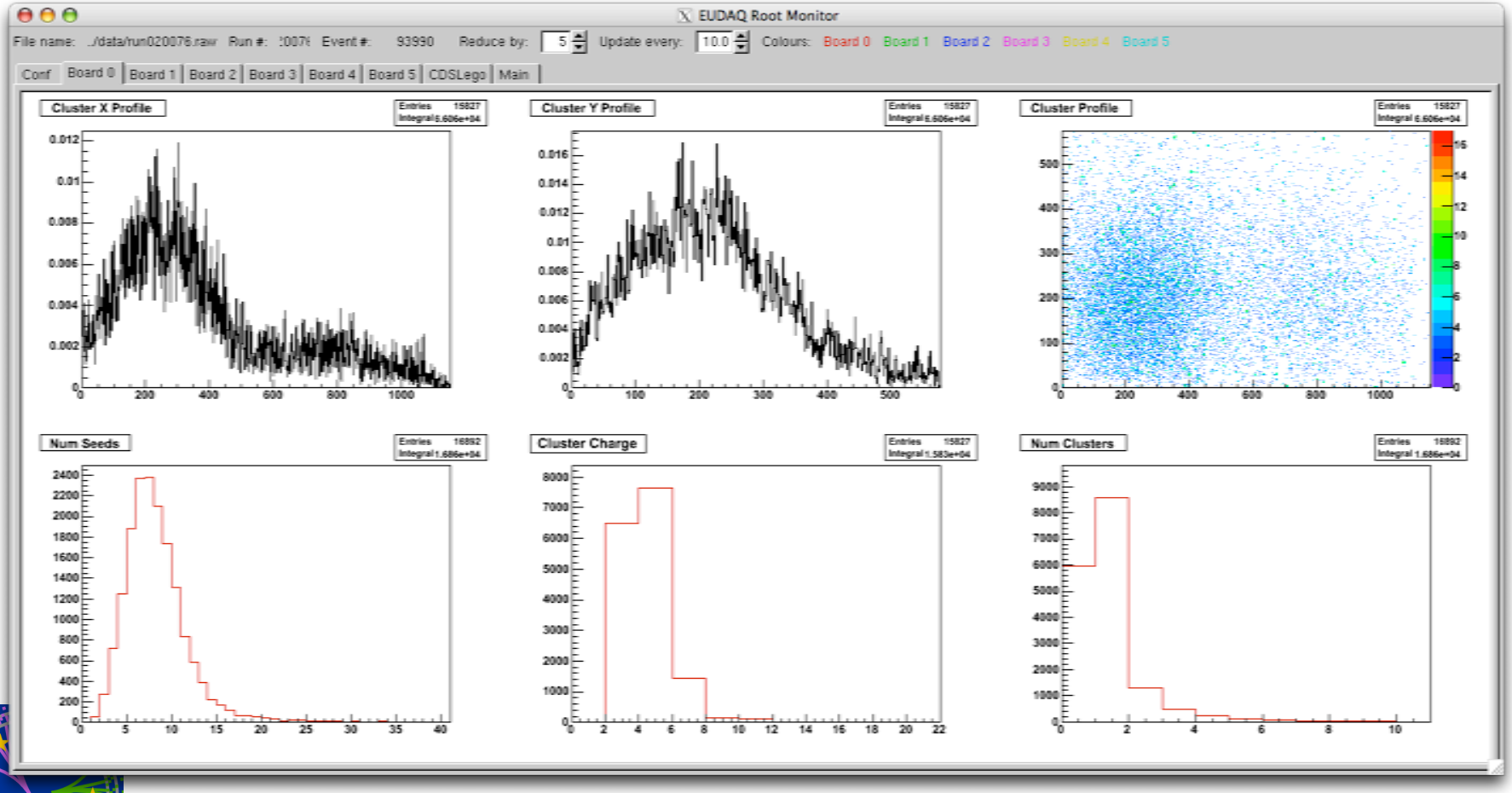

Software: Log Collector

EUDAQ Log Collector

Level: 4-INFO From: All Search:

Received	Sent	Level	Text	From	File	Function
02:21:04.254	02:21:04.254	4-INFO	Connection from LogCollector (127.0.0.1:52962)	LogCollector	euLog.hh:97	
02:21:07.756	02:21:07.756	4-INFO	Connection from DataCollector (127.0.0.1:52964)	LogCollector	euLog.hh:97	
02:21:09.458	02:21:09.457	4-INFO	Connection from Producer.TLU (129.194.55.246:3...	LogCollector	euLog.hh:97	
02:21:09.460	02:21:09.459	4-INFO	Connection from Producer.TLU (129.194.55.246:4...	DataCollector	DataCollector.cc:64	OnConnect(const eudaq::ConnectionIn...
02:21:09.561	02:21:09.561	4-INFO	Connection from Producer.EUDRB1 (129.194.55.1...	LogCollector	euLog.hh:97	
02:21:09.661	02:21:09.661	4-INFO	Connection from Producer.EUDRB1 (129.194.55.1...	DataCollector	DataCollector.cc:64	OnConnect(const eudaq::ConnectionIn...
02:21:09.962	02:21:09.961	4-INFO	Connection from Monitor.Root (127.0.0.1:52968)	LogCollector	euLog.hh:97	
02:21:10.463	02:21:10.463	4-INFO	Connection from Producer.EUDRB2 (129.194.55.2...	LogCollector	euLog.hh:97	
02:21:10.562	02:21:10.561	4-INFO	Connection from Producer.EUDRB2 (129.194.55.2...	DataCollector	DataCollector.cc:64	OnConnect(const eudaq::ConnectionIn...
02:21:25.281	02:21:25.281	4-INFO	Configuring (silc2010-beam-APVDAQandEUDAQ...	RunControl	RunControl.cc:87	Configure(const std::string&, int)
02:21:28.512	02:09:39.586	4-INFO	Configured (silc2010-beam-APVDAQandEUDAQ_...	Producer.TLU	TLUProducer.cxx:140	OnConfigure(const eudaq::Configuratio...
02:21:44.713	04:12:11.080	4-INFO	Configured (silc2010-beam-APVDAQandEUDAQ_...	Producer.EUDRB2	EUDRBProducer.cxx:...	OnConfigure(const eudaq::Configuratio...
02:21:44.713	00:32:01.940	4-INFO	Configured (silc2010-beam-APVDAQandEUDAQ_...	Producer.EUDRB1	EUDRBProducer.cxx:...	OnConfigure(const eudaq::Configuratio...
02:22:47.027	02:22:47.027	4-INFO	Starting Run 20076:	RunControl	RunControl.cc:115	StartRun(const std::string&)
02:22:48.058	02:22:48.058	4-INFO	Preparing for run 20076	DataCollector	DataCollector.cc:93	OnPrepareRun(unsigned int)
02:22:54.075	02:22:54.075	4-INFO	Starting run 20076	Monitor.Root	Monitor.cc:68	OnStartRun(unsigned int)
02:26:41.127	02:26:41.127	4-INFO	4 hot pixel was/were killed on board 0	Monitor.Root	RootMonitor.cxx:2057	FillBoard(RootMonitor::BoardDisplay&, ...
02:26:41.137	02:26:41.137	4-INFO	2 hot pixel was/were killed on board 1	Monitor.Root	RootMonitor.cxx:2057	FillBoard(RootMonitor::BoardDisplay&, ...
02:26:41.146	02:26:41.146	4-				
02:26:41.157	02:26:41.157	4-				
02:26:41.166	02:26:41.166	4-				
02:26:41.177	02:26:41.176	4-				

Log Message

Name	Full	Short
Received	2010-09-28 02:21:28.512	02:21:28.512
Sent	2010-09-28 02:09:39.586	02:09:39.586
Level	4-INFO	4-INFO
Text	Configured (silc2010-beam-APVDAQandEUDAQ_both_thick_Szinti)	Configured (silc2010-beam-APVDAQand...
From	Producer.TLU	Producer.TLU
File	src/TLUProducer.cxx:140	TLUProducer.cxx:140
Function	virtual void TLUProducer::OnConfigure(const eudaq::Configuration&)	OnConfigure(const eudaq::Configuration&)

Close

User Integration: Hardware

- Mechanical:
  - Small devices inside telescope, optional XY stage, best resolution
  - Larger devices behind telescope
- Trigger:
  - Trigger number readout
  - Simple Handshake
  - (no handshake)

User Integration: Software

- TLU Level Integration
  - No software to write
  - data merged offline
- Partially Integrated
  - User writes RunListener that receives messages from run control (configure, run numbers etc.)
  - Separate data streams
- Full Integration
  - User writes Producer
  - Single merged data stream
  - Improved online monitoring

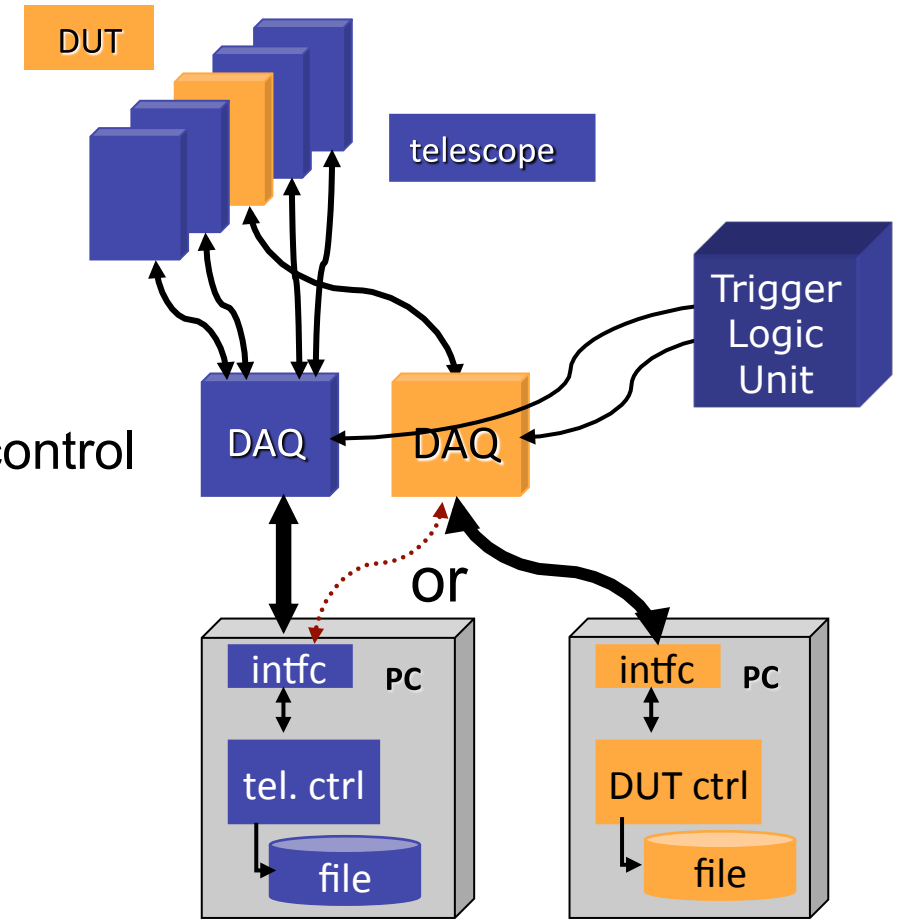

Full Integration

- Raw data written to disk
  - New users can get up and running as quickly as possible
- Conversion needed to understand data: DataConverterPlugin
  - All code relating to one DUT is contained in a single location
  - StandardEvent for online monitoring
  - LCIO for full analysis

Recent Improvements

- Run Control status display
  - Feedback while configuring, TLU status
- Log message sorting
  - By received time instead of sent time
- TLU synchronization
  - Offline correction of spurious triggers
- Stability
- Software User Manual
  - http://www.eudet.org/e26/e28/e86887/e86890/EUDET-Memo-2010-01.pdf

Future of EUDAQ

- After EUDET, telescope will still exist and need to be maintained
- EUDAQ will probably continue in AIDA, maybe merged with other system(s)
- Some improvements still needed for EUDAQ in the long term

Future of EUDAQ

- Monitoring: plug-in mechanism for new plots
- Data Collector: improve merging and error checking
- JTAG programming: integrate into EUDAQ
- Configure script for easier installation
- Automated testing framework?
- Explicit License Terms (GPL?)
- Other maintainers needed

Summary

- Present:
  - Many users have successfully integrated their systems with EUDAQ
  - Has been proven (increasingly) user friendly and stable
  - Codebase starting to stabilise
- Future
  - Some Improvements still needed for long term
  - Other maintainers